LOT 20
BUCKHEAD II PUD PHASES 1 & 2
PB 7/135

IRBY PHONEMANY VORASANE & SEAN
30576 TROPHY TRL
BRYCEVILLE, FL 32009

2023

01-1S-24-018C-0020-0000

BUILDING CHARACTERISTICS

ELEMENT	CD	CONSTRUCTION
Exterior Wall	10	ABOVE AVG 100
Roof Structur	03	GABLE/HIP 100
Roof Cover	03	COMP SHNGL 100
Interior Wall	05	DRYWALL 100
Interior Floo	14	CARPET 60
Interior Floo	11	CLAY TILE 40
Air Condition	03	CENTRAL 100
Heating Type	04	AIR DUCTED 100
Bedrooms		3 100
Bathrooms		2 100
Frame	02	WOOD FRAME 100
Stories	0	0 100
Units		0 100
Occupancy	00	NONE 100
Quality	01	Quality Level 01

DOR CODE	0100	SINGLE FAMILY	
MAP NUM		MKT AREA	08
NEIGHBORHOOD/LOC	8016.00		

AREA TYPE	TOTAL GROSS AREA	PCT OF BASE	TOT ADJ AREA	SUBAREA MARKET VALUE
BAS	2,124	100	2,124	240,847
FGR	795	55	437	49,552
FOP	36	30	11	1,247
FOP	160	30	48	5,443
TOTALS	3,115		2,620	297,090

MARKET ADJUSTMENTS

TYPE	MDL	EFF. AREA	TOT ADJ PTS	EFF. BASE RATE	REPL. COST NEW	AYB	EYB	ECON	FNCT		NORM	% COND
0900	01	2,620	96.9408	115.12	301,614	2018	2018	0	0	0	1.50	98.50

1 SNGL FAM – 0% - 2023 Heated Area: 2124 HX Base Yr

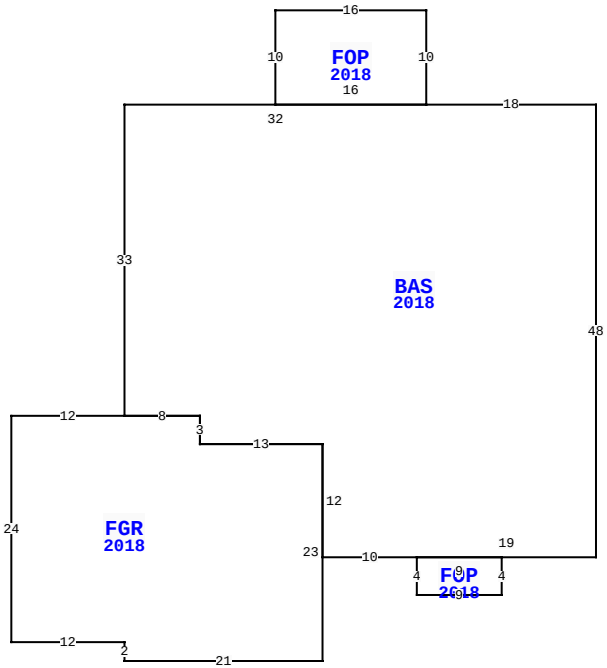

30576 TROPHY TRL, BRYCEVILLE

BLD DATE		LGL DATE	
XF DATE		LAND DATE	
INC DATE		AG DATE	

NASSAU COUNTY PROPERTY

PAGE 1 of 1 6

VALUATION SUMMARY

VALUATION BY	STANDARD
Tax Group: 6	Tax Dist:
BUILDING MARKET VALUE	297,090
TOTAL MARKET OB/XF VALUE	6,284
TOTAL LAND VALUE - MARKET	30,000
TOTAL MARKET VALUE	333,374
SOH/AGL Deduction	0
ASSESSED VALUE	333,374
TOTAL EXEMPTION VALUE	0
BASE TAXABLE VALUE	333,374
TOTAL JUST VALUE	333,374
NCON VALUE	0
INCOME VALUE	
PREVIOUS YEAR MKT VALUE	271,713

PERMIT NUM	DESCRIPTION	AMT	ISSUED
18010947	CO ISSUED	0	10/31/2018
18006042	NEW CONSTR	296,389	06/13/2018

SALES DATA

OFF RECORD Number	DATE	TYPE INST	Q / U	V / I	RSN CD	SALE PRICE
2590/1535	9/09/2022	WD	Q	I	01	419,900
GRANTOR: PIPKIN KYLE I & TABIT						
GRANTEE: IRBY PHONEMANY VORA						
2236/0662	11/09/2018	WD	Q	I	01	262,000
GRANTOR: SEDA CONSTRUCTION COM						
GRANTEE: PIPKIN KYLE I & TAB						

BUILDING NOTES

BUILDING DIMENSIONS

BAS=[YR=2018] W18 FOP=[YR=2018] N10 W16 S10 E16$ W32 S33
FGR=[YR=2018] W12 S24 E12 S2 E21 N23 W13 N3 W8$ E8 S3 E13 S12
E10 FOP=[YR=2018] S4 E9 N4 W9$ E19 N48$.

EXTRA FEATURES

LN	OB/XF CODE	DESCRIPTION	BLD	CAP	L	W	UNITS	UT	Adj R	ADJ UNIT PRICE	ORIG COND	YEAR ON	YEAR ACTUAL	Q	% COND	OB/XF MKT VALUE	NOTES
1	0504	FP-ELECTRI	0	0	0	0	1.00	UT	2,000.00	2,000.00	100	2018	2018	3	99	1,980	
2	0812	CONCRETE C	0	0	0	0	1,098.00	SF	4.00	4.00	100	2018	2018	3	98	4,304	

LAND DESCRIPTION

TOTAL OB/XF 6,284

LN	USE CODE	CLS	LAND USE DESCRIPTION	CAP	RD	LOC ZONE	FRONT	DEPTH	TOT LND UTS	UNIT TYPE	DT	DPTH FACT	% COND	TOT ADJ	UNIT PRICE	ADJ UNIT PRICE	LAND VALUE	OTHER ADJUSTMENTS AND NOTES	YEAR	DENSITY	DECL	FRZ	YR	CONSRV
1	000100	C	SFR	0			0.00	0.00	1.00	LT		1.00	1.00	1.00	30,000.00	30,000.00	30,000							

REVIEW DATE 12/21/2018 BY TW Total Acres: 0.00 Total Land Value: 30,000 Market: 0 Agricultural: 0 Common: 30,000 PRINTED 08/02/2023 BY SYS