LOT 25
SUMMER BEACH WEST REPLAT
PB 6/283

COASTAL RENTS LLC
3980 S FLETCHER AVE
FERNADNINA BEACH, FL 32034

2023

00-SB-30-197W-0025-0000

BUILDING CHARACTERISTICS

ELEMENT	CD	CONSTRUCTION
Exterior Wall	16	WD FR STUC 100
Roof Structur	08	IRREGULAR 100
Roof Cover	03	COMP SHNGL 100
Interior Wall	05	DRYWALL 100
Interior Floo	14	CARPET 60
Interior Floo	11	CLAY TILE 40
Air Condition	03	CENTRAL 100
Heating Type	04	AIR DUCTED 100
Bedrooms		5 100
Bathrooms		4 100
Frame	02	WOOD FRAME 100
Stories	2.	2. 100
Units		0 100
Quality	04	Quality Level 04
DOR CODE	0100	SINGLE FAMILY
MAP NUM		MKT AREA 03
NEIGHBORHOOD/LOC	3021.00	

AREA TYPE	TOTAL GROSS AREA	PCT OF BASE	TOT ADJ AREA	SUBAREA MARKET VALUE
BAS	2,432	100	2,432	443,932
FEP	161	80	129	23,548
FGR	466	55	256	46,730
FOP	81	30	24	4,381
FUS	492	100	492	89,808
PTO	15	5	1	183
PTO	133	5	7	1,278
TOTALS	3,780		3,341	609,860

MARKET ADJUSTMENTS

TYPE	MDL	EFF. AREA	TOT ADJ PTS	EFF. BASE RATE	REPL. COST NEW	AYB	EYB	ECON	FNCT		NORM	% COND
0500	11	3,341	142.3277	202.82	677,622	2002	2002	0	0	0	10.00	90.00

1 SFR CUST – 0% - 0 Heated Area: 2924 HX Base Yr

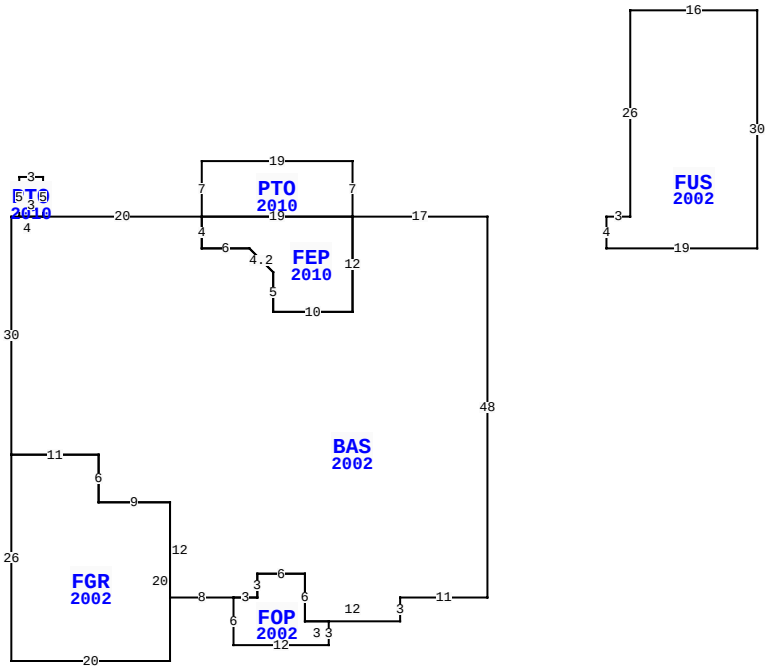

95113 SAGO DR, FERNANDINA BEACH

BLD DATE		LGL DATE	
XF DATE		LAND DATE	
INC DATE		AG DATE	

NASSAU COUNTY PROPERTY

PAGE 1 of 1 8

VALUATION SUMMARY

VALUATION BY	STANDARD
Tax Group: 8	Tax Dist:
BUILDING MARKET VALUE	609,860
TOTAL MARKET OB/XF VALUE	6,012
TOTAL LAND VALUE - MARKET	175,000
TOTAL MARKET VALUE	790,872
SOH/AGL Deduction	193,067
ASSESSED VALUE	597,805
TOTAL EXEMPTION VALUE	0
BASE TAXABLE VALUE	597,805
TOTAL JUST VALUE	790,872
NCON VALUE	0
INCOME VALUE	
PREVIOUS YEAR MKT VALUE	629,606

PERMIT NUM	DESCRIPTION	AMT	ISSUED
B23456	REMODEL	16,000	04/01/2010
B0108697	NEW CONSTR	205,811	08/01/2001

SALES DATA

OFF RECORD Number	DATE	TYPE INST	Q U	V I	RSN CD	SALE PRICE
2295/1960	8/06/2019	WD	Q	I	01	515,000
GRANTOR: CROSS ANN R M						
GRANTEE: COASTAL RENTS LLC						
1185/1195	10/31/2003	TD	Q	I		447,500
GRANTOR: ROBINSON PENELOPE G &						
GRANTEE: CROSS MICHAEL J & A						

BUILDING NOTES

BUILDING DIMENSIONS

BAS=[YR=2002] W17 PTO=[YR=2010] N7W19S7E19 $FEP=[YR=2010] W19S4E6 D3 R3 S5E10N12 $ S12 W10 N5 U3 L3 W6 N4 W20 PTO=[YR=2010] N5W3S5E3$ W4 S30 FGR=[YR=2002] S26 E20 N20 W9 N6 W11 $ E11 S6 E9 S12 E8 FOP=[YR=2002] S6 E12 N3 W3N6 W6 S3 W3$ E3 N3 E6 S6 E12 N3 E11 N48$ PTR=E15 FUS=[YR=2002] E3 N26 E16 S30 W19 N4 $ W15$.

EXTRA FEATURES

LN	OB/XF CODE	DESCRIPTION	BLD	CAP	L	W	UNITS	UT	Adj R	ADJ UNIT PRICE	ORIG COND	YEAR ON	YEAR ACTUAL	Q	% COND	OB/XF MKT VALUE	NOTES
1	0500	FP-PRE FAB	0	0	0	0	1.00	UT	3,500.00	3,500.00	100	2002	2002	3	87	3,045	
2	0810	CONCRETE A	0	0	0	0	456.00	SF	6.50	6.50	100	2002	2002	3	83	2,460	
3	0810	CONCRETE A	0	0	0	0	94.00	SF	6.50	6.50	100	2002	2002	3	83	507	

LAND DESCRIPTION

TOTAL OB/XF 6,012

LN	USE CODE	CLS	LAND USE DESCRIPTION	CAP	RD	LOC ZONE	FRONT	DEPTH	TOT LND UTS	UNIT TYPE	DT	DPTH FACT	% COND	TOT ADJ	UNIT PRICE	ADJ UNIT PRICE	LAND VALUE	OTHER ADJUSTMENTS AND NOTES	YEAR	DENSITY	DECL	FRZ	YR	CONSRV
1	000100	C	SFR	0	0003		0.00	0.00	1.00	LT		1.00	1.00	1.00	175,000.00	175,000.00	175,000							

REVIEW DATE 04/22/2020 BY DJA Total Acres: 0.00 Total Land Value: 175,000 Market: 0 Agricultural: 0 Common: 175,000 PRINTED 08/02/2023 BY SYS