LOT 2
IN OR 1613/491
INCL PROPERTY E OF LOT TO

HALL VALORIE JEANNE
4938 SEA WATCH DRIVE
FERNANDINA BEACH, FL 32034

2023

00-SB-30-1943-0002-0000

NASSAU COUNTY PROPERTY

BUILDING CHARACTERISTICS

ELEMENT	CD	CONSTRUCTION
Exterior Wall	17	CB STUCCO 100
Roof Structur	08	IRREGULAR 100
Roof Cover	10	WD SHINGLE 100
Interior Wall	05	DRYWALL 100
Interior Floo	14	CARPET 70
Interior Floo	11	CLAY TILE 30
Air Condition	03	CENTRAL 100
Heating Type	04	AIR DUCTED 100
Bedrooms		3 100
Bathrooms		3.5 100
Frame	02	WOOD FRAME 100
Stories	2.	2. 100
Units		0 100
Quality	06	Quality Level 06
DOR CODE	0100	SINGLE FAMILY
MAP NUM		MKT AREA 03
NEIGHBORHOOD/LOC	3015.00	

AREA TYPE	TOTAL GROSS AREA	PCT OF BASE	TOT ADJ AREA	SUBAREA MARKET VALUE
BAS	875	100	875	115,058
FGR	420	55	231	30,375
FOP	30	30	9	1,183
FOP	184	30	55	7,233
FOP	228	30	68	8,941
FST	43	55	24	3,156
FUS	1,311	100	1,311	172,389
UOP	18	20	4	526
UOP	26	20	5	658
TOTALS	3,135		2,582	339,518

MARKET ADJUSTMENTS

TYPE	MDL	EFF. AREA	TOT ADJ PTS	EFF. BASE RATE	REPL. COST NEW	AYB	EYB	ECON	FNCT		NORM	% COND
0320	11	2,582	160.9430	152.90	394,788	1994	1994	0	0	0	14.00	86.00

1 TOWNHOUSE - 100% - 2010 Heated Area: 2186 HX Base Yr 2010

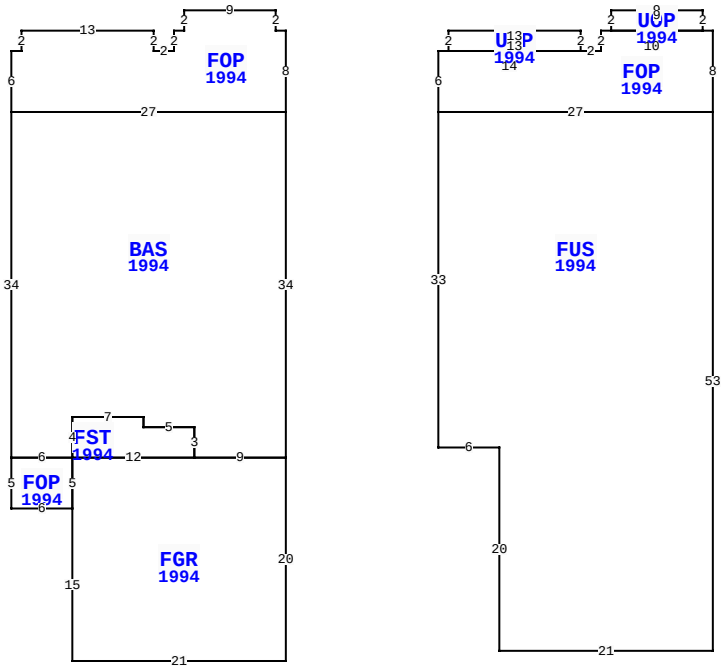

4938 SEA WATCH DR, FERNANDINA BEACH

BLD DATE		LGL DATE	
XF DATE		LAND DATE	
INC DATE		AG DATE	

VALUATION SUMMARY

VALUATION BY		STANDARD
Tax Group: 8	Tax Dist:	
BUILDING MARKET VALUE		339,518
TOTAL MARKET OB/XF VALUE		3,656
TOTAL LAND VALUE - MARKET		1,000,000
TOTAL MARKET VALUE		1,343,174
SOH/AGL Deduction		551,435
ASSESSED VALUE		791,739
TOTAL EXEMPTION VALUE	HX HB WX	55,000
BASE TAXABLE VALUE		736,739
TOTAL JUST VALUE		1,343,174
NCON VALUE		0
INCOME VALUE		
PREVIOUS YEAR MKT VALUE		1,169,096

PERMIT NUM	DESCRIPTION	AMT	ISSUED
M14908	H/AC	0	11/01/2009

SALES DATA

OFF RECORD Number	DATE	TYPE INST	Q / U	V / I	RSN CD	SALE PRICE
1613/0491	4/01/2009	WD	Q	I	01	1,050,000
GRANTOR: COLEY RONALD S & BARB						
GRANTEE: HALL RANDY C & VALO						
0698/0607	2/11/2994	WD	Q	I		353,900
GRANTOR: NASSAU BCH DEV VENTUR						
GRANTEE: COLEY RONALD & BARB						

BUILDING NOTES

BUILDING DIMENSIONS

FOP=[YR=1994] W1 UOP=[YR=1994] N2 W9 S2 E9 $ W10 S2 W2 UOP=[YR=1994] N2 W13 S2 E13 $ W14 S6 FUS=[YR=1994] S33 E6 S20 E21 N53 W27 $ E27 N8 $ PTR= W42 FOP=[YR=1994] W1 N2 W9 S2 W1 S2 W2 N2 W13 S2 W1 S6 BAS=[YR=1994] S34 FOP=[YR=1994] S5 E6 FGR=[YR=1994] S15 E21 N20 W9 FST=[YR=1994] N3 W5 N1 W7 S4 E12 $ W12 S5 $ N5 W6 $ E6 N4 E7 S1 E5 S3 E9 N34 W27 $ E27 N8 $ E42 $.

EXTRA FEATURES

LN	OB/XF CODE	DESCRIPTION	BLD	CAP	L	W	UNITS	UT	Adj R	ADJ UNIT PRICE	ORIG COND	YEAR ON	YEAR ACTUAL	Q	% COND	OB/XF MKT VALUE	NOTES
1	0811	CONCRETE B	0	100	0	0	720.00	SF	5.20	5.20	100	1994	1994	3	70	2,621	
2	0825	BRICK	0	100	16	2	32.00	SF	12.50	12.50	100	1994	1994	3	91	364	
3	0825	BRICK	0	100	0	0	59.00	SF	12.50	12.50	100	1994	1994	3	91	671	

LAND DESCRIPTION

TOTAL OB/XF 3,656

LN	USE CODE	CLS	LAND USE DESCRIPTION	CAP	RD	LOC ZONE	FRONT	DEPTH	TOT LND UTS	UNIT TYPE	DT	DPTH FACT	% COND	TOT ADJ	UNIT PRICE	ADJ UNIT PRICE	LAND VALUE	OTHER ADJUSTMENTS AND NOTES	YEAR	DENSITY	DECL	FRZ	YR	CONSRV
1	000120	C	SFR OCN FT	100		PUD	0.00	0.00	1.00	LT		1.00	1.00	1.00	1,000,000.00	1,000,000.00	1,000,000							

REVIEW DATE 07/22/2019 BY DJA Total Acres: 0.00 Total Land Value: 1,000,000 Market: 0 Agricultural: 0 Common: 1,000,000 PRINTED 08/02/2023 BY SYS