LOT 18
RIVER PLACE @ SUMMER BEACH
PB 6/315

MORIN ROGER A & SUSAN J
95180 SPRING TIDE LN
FERNANDINA BEACH, FL 32034

2023

00-SB-30-185R-0018-0000

BUILDING CHARACTERISTICS

ELEMENT	CD	CONSTRUCTION
Exterior Wall	17	CB STUCCO 100
Roof Structur	08	IRREGULAR 100
Roof Cover	07	CONC TILE 100
Interior Wall	05	DRYWALL 100
Interior Floo	11	CLAY TILE 50
Interior Floo	14	CARPET 50
Air Condition	03	CENTRAL 100
Heating Type	04	AIR DUCTED 100
Bedrooms		3 100
Bathrooms		4 100
Frame	02	WOOD FRAME 100
Stories	3.	3. 100
Units		0 100
Quality	02	Quality Level 02
DOR CODE	0100	SINGLE FAMILY
MAP NUM		MKT AREA 03
NEIGHBORHOOD/LOC	3023.00	

AREA TYPE	TOTAL GROSS AREA	PCT OF BASE	TOT ADJ AREA	SUBAREA MARKET VALUE
BAS	620	100	620	90,368
FGR	542	55	298	43,435
FOP	24	30	7	1,020
FOP	197	30	59	8,600
FOP	266	30	80	11,661
FSP	144	40	58	8,454
FSP	261	40	104	15,159
FST	20	55	11	1,603
FST	20	55	11	1,603
FST	25	55	14	2,040
TOTALS	5,139		4,115	599,781

MARKET ADJUSTMENTS

TYPE	MDL	EFF. AREA	TOT ADJ PTS	EFF. BASE RATE	REPL. COST NEW	AYB	EYB	ECON	FNCT		NORM	% COND
0320	12	4,115	168.6036	160.17	659,100	2004	2004	0	0	0	9.00	91.00

1 TOWNHOUSE - 100% - 0 Heated Area: 3432 HX Base Yr

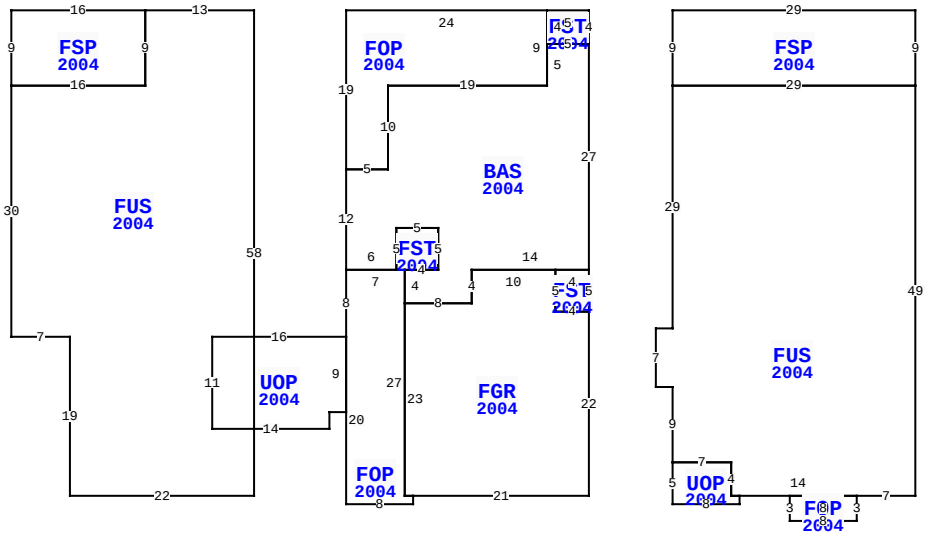

** This building has 14 Sub-Areas

95180 SPRING TIDE LN, FERNANDINA BEACH

BLD DATE		LGL DATE	
XF DATE		LAND DATE	
INC DATE		AG DATE	

NASSAU COUNTY PROPERTY

PAGE 1 of 1 8

VALUATION SUMMARY

VALUATION BY		STANDARD
Tax Group: 8	Tax Dist:	
BUILDING MARKET VALUE		599,781
TOTAL MARKET OB/XF VALUE		16,464
TOTAL LAND VALUE - MARKET		600,000
TOTAL MARKET VALUE		1,216,245
SOH/AGL Deduction		361,966
ASSESSED VALUE		854,279
TOTAL EXEMPTION VALUE	HX HB	50,000
BASE TAXABLE VALUE		804,279
TOTAL JUST VALUE		1,216,245
NCON VALUE		0
INCOME VALUE		
PREVIOUS YEAR MKT VALUE		872,154

PERMIT NUM	DESCRIPTION	AMT	ISSUED

SALES DATA

OFF RECORD Number	DATE	TYPE INST	Q U	V I	RSN CD	SALE PRICE
2629/1516	4/03/2023	WD	Q	I	01	1,550,000
GRANTOR: HAYDEN WILLIAM C & SH						
GRANTEE: MORIN ROGER A & SUS						
2448/0418	3/31/2021	WD	Q	I	01	870,000
GRANTOR: FROGALE ROBERT J & LA						
GRANTEE: HAYDEN WILLIAM C &						

BUILDING NOTES

EXTRA FEATURES

LN	OB/XF CODE	DESCRIPTION	BLD	CAP	L	W	UNITS	UT	Adj R	ADJ UNIT PRICE	ORIG COND	YEAR ON	YEAR ACTUAL	Q	% COND	OB/XF MKT VALUE	NOTES
1	0811	CONCRETE B	0	100	0	0	578.00	SF	5.20	5.20	100	2004	2004	3	86	2,585	
2	0810	CONCRETE A	0	100	15	4	60.00	SF	6.50	6.50	100	2004	2004	3	86	335	
3	0810	CONCRETE A	0	100	0	0	195.00	SF	6.50	6.50	100	2004	2004	3	86	1,090	
4	1126	CB/STC 8"	0	100	0	0	98.00	SF	8.00	8.00	100	2004	2004	3	86	674	
5	0504	FP-ELECTRI	0	100	0	0	1.00	UT	2,000.00	2,000.00	100	2004	2004	3	89	1,780	
6	0410	ELEVATOR	0	100	0	0	1.00	UT	10,000.00	10,000.00	100	2004	2004	3	100	10,000	

BUILDING DIMENSIONS

FST=[YR=2004] W5 FOP=[YR=2004] W24 S19 BAS=[YR=2004] S12 FOP=[YR=2004] S8 UOP=[YR=2004] W16 S11 E14 N2 E2 N9 $ S20 E8 N1 FGR=[YR=2004] E21 N22 FST=[YR=2004] N5 W4 S5 E4 $ W4 N5 W10 S4 W8 S23 E1 $ W1 N27 FST=[YR=2004] E4 N5 W5 S5 E1 $ W7 $ E6 N5 E5 S5 W4 S4 E8 N4 E14 N27 W5 S5 W19 S10 W5 $ E5 N10 E19 N9 $ S4 E5 N4 $ PTR= E10 FSP=[YR=2004] E29 S9 FUS=[YR=2004] S49 W7 FOP=[YR=2004] S3 W8 N3 E8 $ W14 UOP=[YR=2004] S1 W8 N5 E7 S4 E1 $ W1 N4 W7 N9 W2 N7 E2 N29 E29 $ W29 N9 $ W10 $ PTR= W40 FUS=[YR=2004] W13 FSP=[YR=2004] W16 S9 E16 N9 $ S9 W16 S30 E7 S19 E22 N58 $ E40 $.

LAND DESCRIPTION

TOTAL OB/XF 16,464

LN	USE CODE	CLS	LAND USE DESCRIPTION	CAP	RD	LOC ZONE	FRONT	DEPTH	TOT LND UTS	UNIT TYPE	DT	DPTH FACT	% COND	TOT ADJ	UNIT PRICE	ADJ UNIT PRICE	LAND VALUE	OTHER ADJUSTMENTS AND NOTES	YEAR	DENSITY	DECL	FRZ	YR	CONSRV
1	000116	C	SFR MARSH	100		PUD	0.00	0.00	1.00	LT		1.00	1.00	1.00	600,000.00	600,000.00	600,000							

REVIEW DATE 05/10/2017 BY DJX Total Acres: 0.00 Total Land Value: 600,000 Market: 0 Agricultural: 0 Common: 600,000 PRINTED 08/02/2023 BY SYS