LOT 15
IN OR 1481/1537
PRESERVE @ SUMMER BEACH #1B

KLIMA DON L & KAREN S
95248 WILLET WAY
FERNANDINA BEACH, FL 32034

2023

00-SB-30-1672-0015-0000

NASSAU COUNTY PROPERTY

BUILDING CHARACTERISTICS

ELEMENT	CD	CONSTRUCTION
Exterior Wall	16	WD FR STUC 70
Exterior Wall	15	CONC BLOCK 30
Roof Structur	08	IRREGULAR 100
Roof Cover	07	CONC TILE 100
Interior Wall	05	DRYWALL 100
Interior Floo	11	CLAY TILE 60
Interior Floo	14	CARPET 40
Air Condition	03	CENTRAL 100
Heating Type	04	AIR DUCTED 100
Bedrooms		3 100
Bathrooms		3 100
Frame	02	WOOD FRAME 100
Stories	2.	2. 100
Units		0 100
Quality	05	Quality Level 05

DOR CODE	0100	SINGLE FAMILY	
MAP NUM		MKT AREA	03
NEIGHBORHOOD/LOC	3021.00		

AREA TYPE	TOTAL GROSS AREA	PCT OF BASE	TOT ADJ AREA	SUBAREA MARKET VALUE
BAS	313	100	313	50,513
BAS	1,909	100	1,909	308,086
FGR	462	55	254	40,993
FOP	552	30	166	26,790
FSP	65	40	26	4,196
FUS	817	100	817	131,852
UOP	50	20	10	1,614
TOTALS	4,168		3,495	564,044

MARKET ADJUSTMENTS

TYPE	MDL	EFF. AREA	TOT ADJ PTS	EFF. BASE RATE	REPL. COST NEW	AYB	EYB	ECON	FNCT		NORM	% COND
0500	01	3,495	119.2136	169.88	593,731	2007	2012	0	0	0	5.00	95.00

1 SFR CUST – 100% - 2009 Heated Area: 3039 HX Base Yr 2009

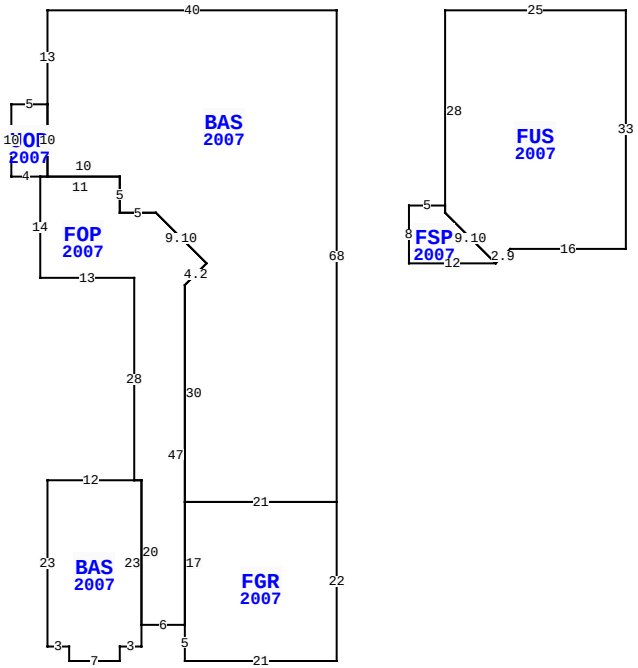

BLD DATE	07/17/2007	KK	LGL DATE
XF DATE			LAND DATE
INC DATE			AG DATE

95248 WILLET WAY, FERNANDINA BEACH

VALUATION SUMMARY

VALUATION BY		STANDARD
Tax Group: 8	Tax Dist:	
BUILDING MARKET VALUE		564,044
TOTAL MARKET OB/XF VALUE		9,774
TOTAL LAND VALUE - MARKET		135,000
TOTAL MARKET VALUE		708,818
SOH/AGL Deduction		215,841
ASSESSED VALUE		492,977
TOTAL EXEMPTION VALUE	HX HB	50,000
BASE TAXABLE VALUE		442,977
TOTAL JUST VALUE		708,818
NCON VALUE		0
INCOME VALUE		
PREVIOUS YEAR MKT VALUE		656,780

PERMIT NUM	DESCRIPTION	AMT	ISSUED
B1901562	REMODEL	28,000	02/19/2019
R0609461	REPAIR/RRF	10,000	06/01/2006
P10653	OTHER	0	01/01/2006
E16103	ELEC OTHER	2,000	11/01/2005
C16158	CO ISSUED	0	09/01/2005
B16158	NEW CONSTR	215,444	09/01/2005

SALES DATA

OFF RECORD Number	DATE	TYPE INST	Q / U	V / I	RSN CD	SALE PRICE
1481/1537	2/28/2007	WD	Q	I		557,900

GRANTOR: THE PRESERVE AT SUMME

GRANTEE: KLIMA DON L & KAREN

BUILDING NOTES

BUILDING DIMENSIONS

BAS=[YR=2007] W40 S13 UOP=[YR=2007] W5 S10 E4 FOP=[YR=2007] S14 E13 S28 BAS=[YR=2007] W12 S23 E3 S2 E7 N2 E3 N23 W1$ E1 S20 E6 FGR=[YR=2007] S5 E21 N22 W21 S17$ N47 U3 R3 U7 L7 W5 N5 W11$ E1 N10$ S10 E10 S5 E5 D7 R7 D3 L3 S30 E21 N68$ PTR=E15 FUS=[YR=2007] E25 S33 W16 D2 L2 FSP=[YR=2007] W12 N8 E5 S1 D7 R7 $ U7 L7 N28$ W15$.

EXTRA FEATURES

LN	OB/XF CODE	DESCRIPTION	BLD	CAP	L	W	UNITS	UT	Adj R	ADJ UNIT PRICE	ORIG COND	YEAR ON	YEAR ACTUAL	Q	% COND	OB/XF MKT VALUE	NOTES
1	0810	CONCRETE A	0	100	0	0	499.00	SF	6.50	6.50	100	2007	2007	3	89	2,887	
2	0810	CONCRETE A	0	100	14	3	42.00	SF	6.50	6.50	100	2007	2007	3	89	243	
3	0910	SCRN RM L	0	100	0	0	469.00	SF	15.00	15.00	100	2007	2007	3	35	2,462	
4	0504	FP-ELECTRI	0	100	0	0	1.00	UT	2,000.00	2,000.00	100	2007	2007	3	92	1,840	
5	1126	CB/STC 8"	0	100	0	0	329.00	SF	8.00	8.00	100	2007	2007	3	89	2,342	

LAND DESCRIPTION

TOTAL OB/XF 9,774

LN	USE CODE	CLS	LAND USE DESCRIPTION	CAP	RD	LOC ZONE	FRONT	DEPTH	TOT LND UTS	UNIT TYPE	DT	DPTH FACT	% COND	TOT ADJ	UNIT PRICE	ADJ UNIT PRICE	LAND VALUE	OTHER ADJUSTMENTS AND NOTES	YEAR	DENSITY	DECL	FRZ	YR	CONSRV
1	000100	C	SFR	100		PUD	0.00	0.00	1.00	LT		1.00	1.00	1.00	135,000.00	135,000.00	135,000							

REVIEW DATE 11/07/2017 BY DJX Total Acres: 0.00 Total Land Value: 135,000 Market: 0 Agricultural: 0 Common: 135,000 PRINTED 08/02/2023 BY SYS