LOT 9
IN OR 1501/422
PRESERVE @ SUMMER BEACH #1B

PAVLOVSKY MARY ELLEN
95224 WILLET WAY
FERNANDINA BEACH, FL 32034

2023

00-SB-30-1672-0009-0000

NASSAU COUNTY PROPERTY

BUILDING CHARACTERISTICS

ELEMENT	CD	CONSTRUCTION
Exterior Wall	16	WD FR STUC 70
Exterior Wall	15	CONC BLOCK 30
Roof Structur	08	IRREGULAR 100
Roof Cover	07	CONC TILE 100
Interior Wall	05	DRYWALL 100
Interior Floo	11	CLAY TILE 70
Interior Floo	14	CARPET 30
Air Condition	03	CENTRAL 100
Heating Type	04	AIR DUCTED 100
Bedrooms		3 100
Bathrooms		3.5 100
Frame	02	WOOD FRAME 100
Stories	1.	1. 100
Units		0 100
Quality	05	Quality Level 05
DOR CODE	0100	SINGLE FAMILY
MAP NUM		MKT AREA 03
NEIGHBORHOOD/LOC	3021.00	

AREA TYPE	TOTAL GROSS AREA	PCT OF BASE	TOT ADJ AREA	SUBAREA MARKET VALUE
BAS	306	100	306	52,432
BAS	1,909	100	1,909	327,101
FGR	462	55	254	43,522
FOP	42	30	13	2,227
FOP	496	30	149	25,531
UOP	50	20	10	1,713
TOTALS	3,265		2,641	452,528

MARKET ADJUSTMENTS

TYPE	MDL	EFF. AREA	TOT ADJ PTS	EFF. BASE RATE	REPL. COST NEW	AYB	EYB	ECON	FNCT		NORM	% COND
0500	01	2,641	129.9936	185.24	489,219	2007	2007	0	0	0	7.50	92.50

1 SFR CUST – 100% - 2009 Heated Area: 2215 HX Base Yr 2009

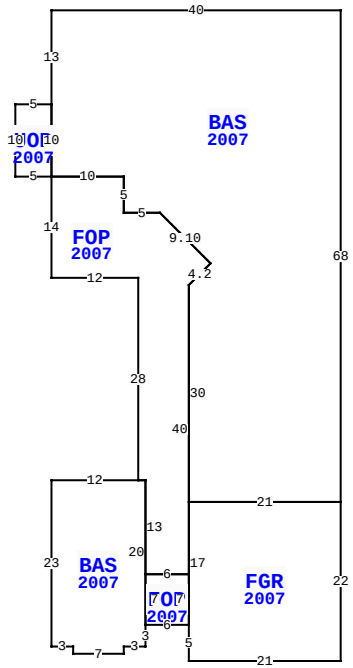

95224 WILLET WAY, FERNANDINA BEACH

BLD DATE	07/18/2007 KK	LGL DATE	
XF DATE		LAND DATE	
INC DATE		AG DATE	

NASSAU COUNTY PROPERTY — VALUATION SUMMARY

VALUATION BY		STANDARD
Tax Group: 8	Tax Dist:	
BUILDING MARKET VALUE		452,528
TOTAL MARKET OB/XF VALUE		5,452
TOTAL LAND VALUE - MARKET		135,000
TOTAL MARKET VALUE		592,980
SOH/AGL Deduction		171,167
ASSESSED VALUE		421,813
TOTAL EXEMPTION VALUE	HX HB	50,000
BASE TAXABLE VALUE		371,813
TOTAL JUST VALUE		592,980
NCON VALUE		0
INCOME VALUE		
PREVIOUS YEAR MKT VALUE		553,323

PERMIT NUM	DESCRIPTION	AMT	ISSUED
M1217508	H/AC	0	08/01/2012
R09702	REPAIR/RRF	10,000	09/01/2006
M11846	MECH OTHER	0	08/01/2006
P10654	OTHER	0	01/01/2006
E16101	ELEC OTHER	2,000	11/01/2005
C15991	CO ISSUED	0	09/01/2005

SALES DATA

OFF RECORD Number	DATE	TYPE INST	Q / U	V / I	RSN CD	SALE PRICE
1501/0422	5/25/2007	WD	Q	I		546,200

GRANTOR: THE PRESERVE AT SUMME

GRANTEE: PAVLOVSKY MARY ELLE

BUILDING NOTES

BUILDING DIMENSIONS

BAS=[YR=2007] W40 S13 UOP=[YR=2007] W5 S10 E5 N10$ S10 FOP=[YR=2007] S14 E12 S28 BAS=[YR=2007] W12 S23 E3 S1 E7 N1 E3 N3 FOP=[YR=2007] E6 FGR=[YR=2007] S5 E21 N22 W21 S17$ N7 W6 S7$ N20 W1$ E1 S13 E6 N40 U3 R3 U7 L7 W5 N5 W10$ E10 S5 E5 R7 D7 L3 D3 S30 E21 N68$.

EXTRA FEATURES

LN	OB/XF CODE	DESCRIPTION	BLD	CAP	L	W	UNITS	UT	Adj R	ADJ UNIT PRICE	ORIG COND	YEAR ON	YEAR ACTUAL	Q	% COND	OB/XF MKT VALUE	NOTES
1	0811	CONCRETE B	0	100	0	0	627.00	SF	5.20	5.20	100	2007	2007	3	89	2,902	
2	0810	CONCRETE A	0	100	12	3	36.00	SF	6.50	6.50	100	2007	2007	3	89	208	
3	1126	CB/STC 8"	0	100	0	0	329.00	SF	8.00	8.00	100	2007	2007	3	89	2,342	

LAND DESCRIPTION

TOTAL OB/XF 5,452

LN	USE CODE	CLS	LAND USE DESCRIPTION	CAP	RD	LOC ZONE	FRONT	DEPTH	TOT LND UTS	UNIT TYPE	DT	DPTH FACT	% COND	TOT ADJ	UNIT PRICE	ADJ UNIT PRICE	LAND VALUE	OTHER ADJUSTMENTS AND NOTES	YEAR	DENSITY	DECL	FRZ	YR	CONSRV
1	000100	C	SFR	100		PUD	0.00	0.00	1.00	LT		1.00	1.00	1.00	135,000.00	135,000.00	135,000							

REVIEW DATE 05/10/2017 BY DJX Total Acres: 0.00 Total Land Value: 135,000 Market: 0 Agricultural: 0 Common: 135,000 PRINTED 08/02/2023 BY SYS