LOT 11
PRESERVE @ SUMMER BEACH #1A
PB 6/399

MASEWICZ RANDOLPH A
110 FOX PATH
CORAOPOLIS, PA 15108

2023

00-SB-30-1671-0011-0000

BUILDING CHARACTERISTICS

ELEMENT	CD	CONSTRUCTION
Exterior Wall	16	WD FR STUC 70
Exterior Wall	15	CONC BLOCK 30
Roof Structur	08	IRREGULAR 100
Roof Cover	07	CONC TILE 100
Interior Wall	05	DRYWALL 100
Interior Floo	11	CLAY TILE 60
Interior Floo	14	CARPET 40
Air Condition	03	CENTRAL 100
Heating Type	04	AIR DUCTED 100
Bedrooms		3 100
Bathrooms		3.5 100
Frame	02	WOOD FRAME 100
Stories	1.	1. 100
Units		0 100
Quality	04	Quality Level 04
DOR CODE	0100	SINGLE FAMILY
MAP NUM		MKT AREA 03
NEIGHBORHOOD/LOC	3021.00	

AREA TYPE	TOTAL GROSS AREA	PCT OF BASE	TOT ADJ AREA	SUBAREA MARKET VALUE
BAS	306	100	306	48,985
BAS	1,911	100	1,911	305,911
DCK	156	10	16	2,561
FGR	462	55	254	40,660
FOP	554	30	166	26,573
UOP	50	20	10	1,601
TOTALS	3,439		2,663	426,291

MARKET ADJUSTMENTS

TYPE	MDL	EFF. AREA	TOT ADJ PTS	EFF. BASE RATE	REPL. COST NEW	AYB	EYB	ECON	FNCT		NORM	% COND
0500	01	2,663	122.7744	174.95	465,892	2005	2005	0	0	0	8.50	91.50

1 SFR CUST – 0% - 0 Heated Area: 2217 HX Base Yr

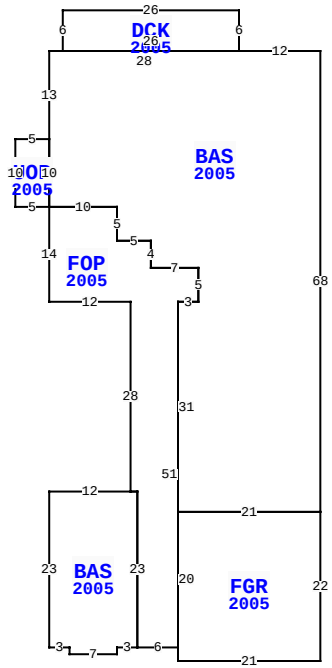

95037 WILLET WAY, FERNANDINA BEACH

BLD DATE		LGL DATE	
XF DATE		LAND DATE	
INC DATE		AG DATE	

NASSAU COUNTY PROPERTY

PAGE 1 of 1 8

VALUATION SUMMARY

VALUATION BY	STANDARD
Tax Group: 8	Tax Dist:
BUILDING MARKET VALUE	426,291
TOTAL MARKET OB/XF VALUE	9,482
TOTAL LAND VALUE - MARKET	141,750
TOTAL MARKET VALUE	577,523
SOH/AGL Deduction	55,827
ASSESSED VALUE	521,696
TOTAL EXEMPTION VALUE	0
BASE TAXABLE VALUE	521,696
TOTAL JUST VALUE	577,523
NCON VALUE	0
INCOME VALUE	
PREVIOUS YEAR MKT VALUE	543,852

PERMIT NUM	DESCRIPTION	AMT	ISSUED
B0413218	NEW CONSTR	203,317	08/01/2004

SALES DATA

OFF RECORD Number	DATE	TYPE INST	Q U	V I	RSN CD	SALE PRICE
2362/0800	5/15/2020	WD	Q	I	01	539,000
GRANTOR: MONAHAN DONALD F & BE						
GRANTEE: MASEWICZ RANDOLPH A						
1573/1812	6/26/2008	TD	U	I	01	100
GRANTOR: MONAHAN DONALD F TRUS						
GRANTEE: MONAHAN DONALD F &						

BUILDING NOTES

BUILDING DIMENSIONS

BAS=[YR=2005] W12 DCK=[YR=2005] N6 W26 S6 E26$ W28 S13
UOP=[YR=2005] W5 S10 E5 N10$ S10 FOP=[YR=2005] S14 E12 S28
BAS=[YR=2005] W12 S23 E3 S1 E7 N1 E3 N23 W1$ E1 S23 E6
FGR=[YR=2005] S2 E21 N22 W21 S20$ N51 E3 N5 W7 N4 W5 N5 W10$
E10 S5 E5 S4 E7 S5 W3 S31 E21 N68$.

EXTRA FEATURES

LN	OB/XF CODE	DESCRIPTION	BLD	CAP	L	W	UNITS	UT	Adj R	ADJ UNIT PRICE	ORIG COND	YEAR ON	YEAR ACTUAL	Q	% COND	OB/XF MKT VALUE	NOTES
1	0500	FP-PRE FAB	0	0	0	0	1.00	UT	3,500.00	3,500.00	100	2005	2005	3	90	3,150	
2	0811	CONCRETE B	0	0	0	0	651.00	SF	5.20	5.20	100	2005	2005	3	87	2,945	
3	0855	CONC PAVER	0	0	14	3	42.00	SF	10.00	10.00	100	2005	2005	3	87	365	
4	0855	CONC PAVER	0	0	0	0	228.00	SF	10.00	10.00	100	2005	2005	3	87	1,984	
5	0910	SCRN RM L	0	0	0	0	474.00	SF	4.50	4.50	100	2005	2005	3	27	576	
6	0462	ST/AL FNC	0	0	0	0	105.00	SF	10.00	10.00	100	2005	2005	3	44	462	

LAND DESCRIPTION

TOTAL OB/XF 9,482

LN	USE CODE	CLS	LAND USE DESCRIPTION	CAP	RD	LOC ZONE	FRONT	DEPTH	TOT LND UTS	UNIT TYPE	DT	DPTH FACT	% COND	TOT ADJ	UNIT PRICE	ADJ UNIT PRICE	LAND VALUE	OTHER ADJUSTMENTS AND NOTES	YEAR	DENSITY	DECL	FRZ	YR	CONSRV
1	000100	C	SFR	0			0.00	0.00	1.00	LT		1.00	1.00	1.05	135,000.00	141,750.00	141,750							

REVIEW DATE 05/10/2017 BY DJX Total Acres: 0.00 Total Land Value: 141,750 Market: 0 Agricultural: 0 Common: 141,750 PRINTED 08/02/2023 BY SYS