LOT 10
IN OR 2065/1149
PRESERVE @ SUMMER BEACH #1A

KING KENNETH T & LOUISE E
95047 WILLET WAY
FERNANDINA BEACH, FL 32034

2023

00-SB-30-1671-0010-0000

BUILDING CHARACTERISTICS

ELEMENT	CD	CONSTRUCTION
Exterior Wall	16	WD FR STUC 70
Exterior Wall	15	CONC BLOCK 30
Roof Structur	08	IRREGULAR 100
Roof Cover	07	CONC TILE 100
Interior Wall	05	DRYWALL 100
Interior Floo	11	CLAY TILE 60
Interior Floo	14	CARPET 40
Air Condition	03	CENTRAL 100
Heating Type	04	AIR DUCTED 100
Bedrooms		4 100
Bathrooms		4 100
Frame	02	WOOD FRAME 100
Stories	2.	2. 100
Units		0 100
Quality	04	Quality Level 04
DOR CODE	0100	SINGLE FAMILY
MAP NUM		MKT AREA 03
NEIGHBORHOOD/LOC	3021.00	

AREA TYPE	TOTAL GROSS AREA	PCT OF BASE	TOT ADJ AREA	SUBAREA MARKET VALUE
BAS	2,316	100	2,316	352,392
FGR	441	55	243	36,973
FOP	48	30	14	2,130
FOP	361	30	108	16,432
FUS	489	100	489	74,404
UOP	50	20	10	1,522
TOTALS	3,705		3,180	483,854

MARKET ADJUSTMENTS

TYPE	MDL	EFF. AREA	TOT ADJ PTS	EFF. BASE RATE	REPL. COST NEW	AYB	EYB	ECON	FNCT		NORM	% COND
0500	01	3,180	116.6928	166.29	528,802	2005	2005	0	0	0	8.50	91.50

1 SFR CUST – 100% - 2020 Heated Area: 2805 HX Base Yr 2020

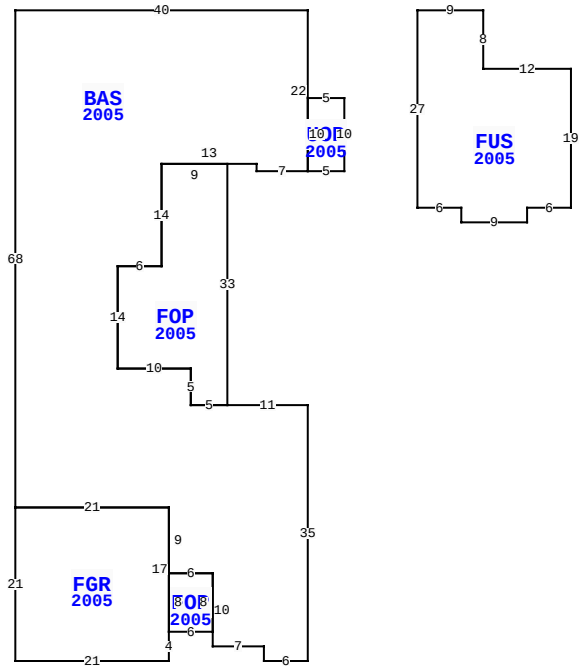

95047 WILLET WAY, FERNANDINA BEACH

BLD DATE		LGL DATE	
XF DATE		LAND DATE	
INC DATE		AG DATE	

NASSAU COUNTY PROPERTY

PAGE 1 of 1 8

VALUATION SUMMARY

VALUATION BY		STANDARD
Tax Group: 8	Tax Dist:	
BUILDING MARKET VALUE		483,854
TOTAL MARKET OB/XF VALUE		7,558
TOTAL LAND VALUE - MARKET		141,750
TOTAL MARKET VALUE		633,162
SOH/AGL Deduction		149,154
ASSESSED VALUE		484,008
TOTAL EXEMPTION VALUE	HX HB	50,000
BASE TAXABLE VALUE		434,008
TOTAL JUST VALUE		633,162
NCON VALUE		0
INCOME VALUE		
PREVIOUS YEAR MKT VALUE		597,281

PERMIT NUM	DESCRIPTION	AMT	ISSUED
B17740	ADDITION	3,000	10/31/2006
B0413225	NEW CONSTR	0	12/01/2004
M0409097	H/AC	0	12/01/2004
R046967	REPAIR/RRF	18,000	12/01/2004

SALES DATA

OFF RECORD Number	DATE	TYPE INST	Q U /	V I /	RSN CD	SALE PRICE
2065/1149	8/15/2016	WD	Q	I	01	468,000
GRANTOR: DAHDAH CINDY R						
GRANTEE: KING KENNETH T & LO						
1371/0185	12/02/2005	WD	Q	I		596,700
GRANTOR: THE PRESERVE AT SUMME						
GRANTEE: DAHDAH CINDY R						

BUILDING NOTES

BUILDING DIMENSIONS

BAS=[YR=2005] W40 S68 FGR=[YR=2005] S21 E21 N4 FOP=[YR=2005] E6 N8 W6 S8 $ N17 W21 $ E21 S9 E6 S10 E7 S2 E6 N35 W11 FOP=[YR=2005] N33 W9 S14 W6 S14 E10 S5 E5 $ W5 N5 W10 N14 E6 N14 E13 S1 E7 UOP=[YR=2005] E5 N10 W5 S10 $ N22 $ PTR= E15 FUS=[YR=2005] E9 S8 E12 S19 W6 S2 W9 N2 W6 N27 $ W15 $.

EXTRA FEATURES

LN	OB/XF CODE	DESCRIPTION	BLD	CAP	L	W	UNITS	UT	Adj R	ADJ UNIT PRICE	ORIG COND	YEAR ON	YEAR ACTUAL	Q	% COND	OB/XF MKT VALUE	NOTES
1	0500	FP-PRE FAB	0	100	0	0	1.00	UT	3,500.00	3,500.00	100	2005	2005	3	90	3,150	
2	0811	CONCRETE B	0	100	0	0	516.00	SF	5.20	5.20	100	2005	2005	3	87	2,334	
3	0810	CONCRETE A	0	100	16	3	48.00	SF	6.50	6.50	100	2005	2005	3	87	271	
4	1126	CB/STC 8"	0	100	0	0	259.00	SF	8.00	8.00	100	2005	2005	3	87	1,803	

LAND DESCRIPTION

TOTAL OB/XF 7,558

LN	USE CODE	CLS	LAND USE DESCRIPTION	CAP	RD	LOC ZONE	FRONT	DEPTH	TOT LND UTS	UNIT TYPE	DT	DPTH FACT	% COND	TOT ADJ	UNIT PRICE	ADJ UNIT PRICE	LAND VALUE	OTHER ADJUSTMENTS AND NOTES	YEAR	DENSITY	DECL	FRZ	YR	CONSRV
1	000100	C	SFR	100			0.00	0.00	1.00	LT		1.00	1.00	1.05	135,000.00	141,750.00	141,750							

REVIEW DATE 11/07/2017 BY DJX Total Acres: 0.00 Total Land Value: 141,750 Market: 0 Agricultural: 0 Common: 141,750 PRINTED 08/02/2023 BY SYS