LOT 8
OCEAN VILLAGE #3 PB 6/27-28

BERKO DAVID
1830 OCEAN VILLAGE PL
FERNANDINA BEACH, FL 32034

2023

00-SB-30-157V-0008-0000

NASSAU COUNTY PROPERTY

BUILDING CHARACTERISTICS

ELEMENT	CD	CONSTRUCTION
Exterior Wall	16	WD FR STUC 100
Roof Structur	08	IRREGULAR 100
Roof Cover	03	COMP SHNGL 100
Interior Wall	05	DRYWALL 100
Interior Floo	11	CLAY TILE 50
Interior Floo	12	HARDWOOD 50
Air Condition	03	CENTRAL 100
Heating Type	04	AIR DUCTED 100
Bedrooms		4 100
Bathrooms		4.5 100
Frame	02	WOOD FRAME 100
Stories	2.	2. 100
Units		0 100
Quality	04	Quality Level 04
DOR CODE	0100	SINGLE FAMILY
MAP NUM		MKT AREA 03
NEIGHBORHOOD/LOC	3045.00	

AREA TYPE	TOTAL GROSS AREA	PCT OF BASE	TOT ADJ AREA	SUBAREA MARKET VALUE
BAS	1,747	100	1,747	333,788
FGR	567	55	312	59,611
FOP	88	30	26	4,968
FSP	242	40	97	18,533
FUS	1,123	100	1,123	214,565
PTO	9	5	0	0
TOTALS	3,776		3,305	631,466

MARKET ADJUSTMENTS

TYPE	MDL	EFF. AREA	TOT ADJ PTS	EFF. BASE RATE	REPL. COST NEW	AYB	EYB	ECON	FNCT		NORM	% COND
0500	11	3,305	148.1568	211.12	697,752	1998	2003	0	0	0	9.50	90.50

1 SFR CUST – 100% - 2022 Heated Area: 2870 HX Base Yr

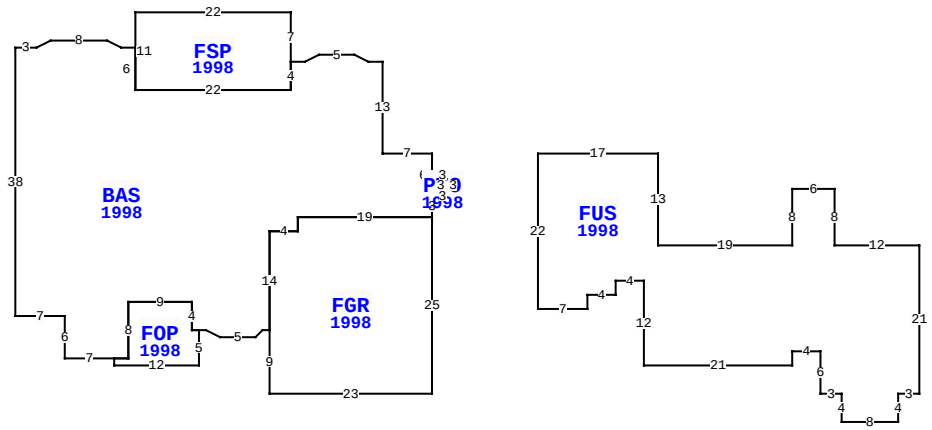

1830 OCEAN VILLAGE PL, FERNANDINA BEACH

BLD DATE		LGL DATE	
XF DATE		LAND DATE	
INC DATE		AG DATE	

VALUATION SUMMARY

VALUATION BY		STANDARD
Tax Group: 8	Tax Dist:	
BUILDING MARKET VALUE		631,466
TOTAL MARKET OB/XF VALUE		9,201
TOTAL LAND VALUE - MARKET		350,000
TOTAL MARKET VALUE		990,667
SOH/AGL Deduction		0
ASSESSED VALUE		990,667
TOTAL EXEMPTION VALUE	13	990,667
BASE TAXABLE VALUE		0
TOTAL JUST VALUE		990,667
NCON VALUE		0
INCOME VALUE		
PREVIOUS YEAR MKT VALUE		779,384

PERMIT NUM	DESCRIPTION	AMT	ISSUED

SALES DATA

OFF RECORD Number	DATE	TYPE INST	Q / U	V / I	RSN CD	SALE PRICE
2356/0342	3/30/2020	QC	U	I	11	100
GRANTOR: SEYMOUR TIFFANY N F/K						
GRANTEE: BERKO DAVID						
2056/0784	7/05/2016	WD	Q	I	02	646,500
GRANTOR: HUGHES MARY S						
GRANTEE: BERKO DAVID & TIFFA						

BUILDING NOTES

BUILDING DIMENSIONS

BAS=[YR=1998] W7 N13 W2 U1 L2 W5 D1 L2 W2 FSP=[YR=1998] N7 W22 S11 E22 N4 $ S4W22 N6 W2 U1 L2 W8 D1 L2 W3 S38 E7 S6 E7 FOP=[YR=1998] S1 E12 N5 W1 N4 W9 S8 W2$ E2N8 E9 S4 E2 D1 R2 E5 U1 R1 E1 FGR=[YR=1998] S9 E23 N25W19 S2 W4 S14 $ N14 E4 N2 E19 N3 PTO=[YR=1998] E3 N3 W3 S3 $ N6 $ PTR= E15 FUS=[YR=1998] E17 S13 E19 N8 E6 S8 E12 S21 W3 S4W8 N4 W3 N6 W4 S2 W21 N12 W4 S2 W4 S2 W7 N22 $ W15 $.

EXTRA FEATURES

LN	OB/XF CODE	DESCRIPTION	BLD	CAP	L	W	UNITS	UT	Adj R	ADJ UNIT PRICE	ORIG COND	YEAR ON	YEAR ACTUAL	Q	% COND	OB/XF MKT VALUE	NOTES
1	0504	FP-ELECTRI	0	100	0	0	1.00	UT	2,000.00	2,000.00	100	1998	1998	3	83	1,660	
2	0855	CONC PAVER	0	100	0	0	1,058.00	SF	7.00	7.00	100	2012	2012	3	94	6,962	
3	0855	CONC PAVER	0	100	0	0	88.00	SF	7.00	7.00	100	2012	2012	3	94	579	

LAND DESCRIPTION

TOTAL OB/XF 9,201

LN	USE CODE	CLS	LAND USE DESCRIPTION	CAP	RD	LOC ZONE	FRONT	DEPTH	TOT LND UTS	UNIT TYPE	DT	DPTH FACT	% COND	TOT ADJ	UNIT PRICE	ADJ UNIT PRICE	LAND VALUE	OTHER ADJUSTMENTS AND NOTES	YEAR	DENSITY	DECL	FRZ	YR	CONSRV
1	000100	C	SFR	100			0.00	0.00	1.00	LT		1.00	1.00	1.00	350,000.00	350,000.00	350,000							

REVIEW DATE 01/14/2021 BY KBA Total Acres: 0.00 Total Land Value: 350,000 Market: 0 Agricultural: 0 Common: 350,000 PRINTED 08/02/2023 BY SYS