LOT 11 & FRAC TRACT B
IN OR 1034/1461
OCEANSIDE @ SUMMER BEACH 2

MORGAN FERRELL TRUST/MORGAN FERRELL TRUSTEE
323 CLEARVIEW DRIVE
TOCOA, GA 30577

**2023**

**00-SB-30-1521-0011-0000**

## BUILDING CHARACTERISTICS

| ELEMENT | CD | CONSTRUCTION |
|---|---|---|
| Exterior Wall | 16 | WD FR STUC 100 |
| Roof Structur | 03 | GABLE/HIP 100 |
| Roof Cover | 03 | COMP SHNGL 100 |
| Interior Wall | 05 | DRYWALL 100 |
| Interior Floo | 14 | CARPET 60 |
| Interior Floo | 08 | SHT VINYL 40 |
| Air Condition | 03 | CENTRAL 100 |
| Heating Type | 04 | AIR DUCTED 100 |
| Bedrooms | | 3 100 |
| Bathrooms | | 2.5 100 |
| Frame | 02 | WOOD FRAME 100 |
| Stories | 2. | 2. 100 |
| Units | | 0 100 |
| Quality | 04 | Quality Level 04 |
| DOR CODE | 0100 | SINGLE FAMILY |
| MAP NUM | | MKT AREA 03 |
| NEIGHBORHOOD/LOC | 3045.00 | |

| AREA TYPE | TOTAL GROSS AREA | PCT OF BASE | TOT ADJ AREA | SUBAREA MARKET VALUE |
|---|---|---|---|---|
| BAS | 1,491 | 100 | 1,491 | 260,641 |
| FGR | 511 | 55 | 281 | 49,121 |
| FOP | 36 | 30 | 11 | 1,923 |
| FOP | 228 | 30 | 68 | 11,887 |
| FUS | 519 | 100 | 519 | 90,726 |
| UOP | 96 | 20 | 19 | 3,322 |
| TOTALS | 2,881 | | 2,389 | 417,619 |

## MARKET ADJUSTMENTS

| TYPE | MDL | EFF. AREA | TOT ADJ PTS | EFF. BASE RATE | REPL. COST NEW | AYB | EYB | ECON | FNCT | | NORM | % COND |
|---|---|---|---|---|---|---|---|---|---|---|---|---|
| 0500 | 11 | 2,389 | 141.0024 | 200.93 | 480,022 | 1993 | 1996 | 0 | 0 | 0 | 13.00 | 87.00 |

1 SFR CUST – 0% - 0 Heated Area: 2010 HX Base Yr

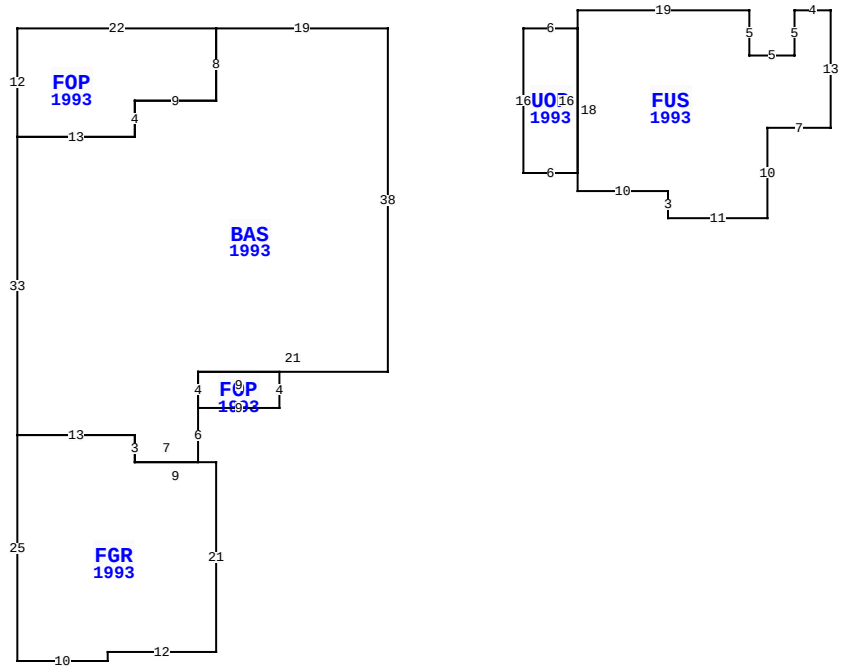


4940 SUMMER BEACH BLVD, FERNANDINA BEACH

| | | | |
|---|---|---|---|
| BLD DATE | | LGL DATE | |
| XF DATE | | LAND DATE | |
| INC DATE | | AG DATE | |

## NASSAU COUNTY PROPERTY



### VALUATION SUMMARY

| | |
|---|---|
| VALUATION BY | STANDARD |
| Tax Group: 8 | Tax Dist: |
| BUILDING MARKET VALUE | 417,619 |
| TOTAL MARKET OB/XF VALUE | 6,011 |
| TOTAL LAND VALUE - MARKET | 250,000 |
| TOTAL MARKET VALUE | 673,630 |
| SOH/AGL Deduction | 177,577 |
| ASSESSED VALUE | 496,053 |
| TOTAL EXEMPTION VALUE | 0 |
| BASE TAXABLE VALUE | 496,053 |
| TOTAL JUST VALUE | 673,630 |
| NCON VALUE | 0 |
| INCOME VALUE | |
| PREVIOUS YEAR MKT VALUE | 560,336 |

| PERMIT NUM | DESCRIPTION | AMT | ISSUED |
|---|---|---|---|
| 8662 | NEW CONSTR | 87,610 | 02/02/1993 |

## SALES DATA

| OFF RECORD Number | DATE | TYPE INST | Q U | V I | RSN CD | SALE PRICE |
|---|---|---|---|---|---|---|
| 1034/1461 | 2/04/2002 | WD | Q | I | | 379,000 |
| GRANTOR: MARTIN RODNEY E & LAV | | | | | | |
| GRANTEE: MORGAN FERRELL & SU | | | | | | |
| 0795/0624 | 6/03/1997 | WD | Q | I | | 250,000 |
| GRANTOR: AVRA W & SUSAN P | | | | | | |
| GRANTEE: MARTIN RODNEY E & L | | | | | | |

## BUILDING NOTES

## BUILDING DIMENSIONS

BAS=[YR=1993] W19 FOP=[YR=1993] W22 S12 E13 N4 E9 N8 $ S8 W9 S4 W13 S33 FGR=[YR=1993] S25 E10 N1 E12 N21 W9 N3 W13 $ E13 S3 E7 N6 FOP=[YR=1993] E9 N4 W9 S4 $ N4 E21 N38 $ PTR= E15 UOP=[YR=1993] E6 FUS=[YR=1993] N2 E19 S5 E5 N5 E4 S13 W7 S10 W11 N3 W10 N18 $ S16 W6 N16 $ W15 $ .

## EXTRA FEATURES

| LN | OB/XF CODE | DESCRIPTION | BLD | CAP | L | W | UNITS | UT | Adj R | ADJ UNIT PRICE | ORIG COND | YEAR ON | YEAR ACTUAL | Q | % COND | OB/XF MKT VALUE | NOTES |
|---|---|---|---|---|---|---|---|---|---|---|---|---|---|---|---|---|---|
| 1 | 0811 | CONCRETE B | 0 | 0 | 0 | 0 | 928.00 | SF | 5.20 | 5.20 | 100 | 1993 | 1993 | 3 | 68 | 3,281 | |
| 2 | 0504 | FP-ELECTRI | 0 | 0 | 0 | 0 | 1.00 | UT | 2,000.00 | 2,000.00 | 100 | 1993 | 1993 | 3 | 76 | 1,520 | |
| 3 | 0858 | SCULP CONC | 0 | 0 | 0 | 0 | 68.00 | SF | 13.00 | 13.00 | 100 | 1993 | 1993 | 3 | 90 | 796 | |
| 4 | 1242 | WD DECK A | 0 | 0 | 0 | 0 | 207.00 | SF | 10.00 | 10.00 | 100 | 1994 | 1994 | 3 | 20 | 414 | |

## LAND DESCRIPTION

TOTAL OB/XF 6,011

| LN | USE CODE | CLS | LAND USE DESCRIPTION | CAP | RD | LOC ZONE | FRONT | DEPTH | TOT LND UTS | UNIT TYPE | DT | DPTH FACT | % COND | TOT ADJ | UNIT PRICE | ADJ UNIT PRICE | LAND VALUE | OTHER ADJUSTMENTS AND NOTES | YEAR | DENSITY | DECL | FRZ | YR | CONSRV |
|---|---|---|---|---|---|---|---|---|---|---|---|---|---|---|---|---|---|---|---|---|---|---|---|---|
| 1 | 000100 | C | SFR | 0 | | PUD | 0.00 | 0.00 | 1.00 | LT | | 1.00 | 1.00 | 1.00 | 250,000.00 | 250,000.00 | 250,000 | | | | | | | |

REVIEW DATE 05/02/2018 BY DJX Total Acres: 0.00 Total Land Value: 250,000 Market: 0 Agricultural: 0 Common: 250,000 PRINTED 08/02/2023 BY SYS