LOT 78
IN OR 2005/228
GOLFSIDE AT SUMMER BEACH #2

WILCOX RICHARD E & SANDY S
95390 SPINNAKER DRIVE
FERNANDINA BEACH, FL 32034

2023

00-SB-30-065B-0078-0000

BUILDING CHARACTERISTICS

ELEMENT	CD	CONSTRUCTION
Exterior Wall	10	ABOVE AVG 100
Roof Structur	08	IRREGULAR 100
Roof Cover	03	COMP SHNGL 100
Interior Wall	05	DRYWALL 100
Interior Floo	12	HARDWOOD 70
Interior Floo	11	CLAY TILE 30
Air Condition	03	CENTRAL 100
Heating Type	04	AIR DUCTED 100
Bedrooms		4 100
Bathrooms		3.5 100
Frame	02	WOOD FRAME 100
Stories	2.	2. 100
Units		0 100
Quality	05	Quality Level 05
DOR CODE	0100	SINGLE FAMILY
MAP NUM		MKT AREA 03
NEIGHBORHOOD/LOC	3019.00	

AREA TYPE	TOTAL GROSS AREA	PCT OF BASE	TOT ADJ AREA	SUBAREA MARKET VALUE
BAL	168	15	25	4,777
BAS	2,358	100	2,358	450,590
FGR	863	55	475	90,768
FOP	8	30	2	382
FOP	125	30	38	7,261
FOP	128	30	38	7,261
FOP	187	30	56	10,701
FST	140	55	77	14,714
FUS	132	100	132	25,224
FUS	1,498	100	1,498	286,253
TOTALS	5,927		4,724	902,709

MARKET ADJUSTMENTS

TYPE	MDL	EFF. AREA	TOT ADJ PTS	EFF. BASE RATE	REPL. COST NEW	AYB	EYB	ECON	FNCT		NORM	% COND
0500	11	4,724	136.1414	194.00	916,456	2018	2018	0	0	0	1.50	98.50

1 SFR CUST – 100% - 2019 Heated Area: 3988 HX Base Yr 2019

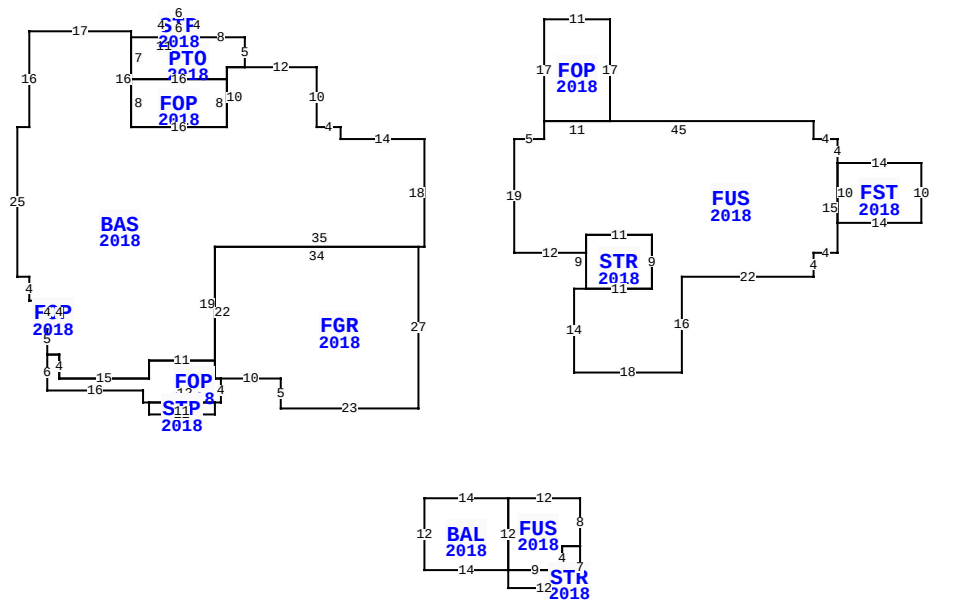

** This building has 15 Sub-Areas

95390 SPINNAKER DR, FERNANDINA BEACH

BLD DATE		LGL DATE	
XF DATE		LAND DATE	
INC DATE		AG DATE	

NASSAU COUNTY PROPERTY

PAGE 1 of 1 8

VALUATION SUMMARY

VALUATION BY		STANDARD
Tax Group: 8	Tax Dist:	
BUILDING MARKET VALUE		902,709
TOTAL MARKET OB/XF VALUE		17,884
TOTAL LAND VALUE - MARKET		531,250
TOTAL MARKET VALUE		1,451,843
SOH/AGL Deduction		494,487
ASSESSED VALUE		957,356
TOTAL EXEMPTION VALUE	HX HB	50,000
BASE TAXABLE VALUE		907,356
TOTAL JUST VALUE		1,451,843
NCON VALUE		0
INCOME VALUE		
PREVIOUS YEAR MKT VALUE		1,247,610

PERMIT NUM	DESCRIPTION	AMT	ISSUED
B1704869	NEW CONSTR	504,973	06/02/2017

SALES DATA

OFF RECORD Number	DATE	TYPE INST	Q U	V I	RSN CD	SALE PRICE
2005/0228	9/25/2015	WD	Q	V	02	335,000
GRANTOR: BRAEGER PAUL J & SHER						
GRANTEE: WILCOX RICHARD E &						
1194/0093	12/08/2003	WD	Q	V		289,000
GRANTOR: SAUL RICHARD A & SAND						
GRANTEE: BRAEGER PAUL J & SH						

BUILDING NOTES

BUILDING DIMENSIONS

BAS=[YR=2018] W14 N2 W4 N10 W12 PTO=[YR=2018] N5 W8 STP=[YR=2018] N4 W6 S4 E6$ W11 S7 FOP=[YR=2018] S8 E16 N8 W16$ E16 N2 E3$ W3 S10 W16 N16 W17 S16 W2 S25 E2 S4 E3 FOP=[YR=2018] S4 E2 N4 W2$ E2 S4 W2 S5 FOP=[YR=2018] S6 E16 S2 E1 STP=[YR=2018] S2 E11 N2 W11$ E12 N4 FGR=[YR=2018] E10 S5 E23 N27 W34 S22 E1$ W1 N3 W11 S3 W15 N4 W2$ E2 S4 E15 N3 E11 N19 E35 N18$PTR= E15 FUS=[YR=2018] E5 N3 FOP=[YR=2018] N17 E11 S17 W11$ E45 S3 E4 S4 FST=[YR=2018] E14 S10 W14 N10$ S15 W4 S4 W22 S16 W18 N14 E2 STR=[YR=2018] N9 E11 S9 W11$ E11 N9 W11 S3 W12 N19$ W15$ PTR=S60 BAL=[YR=2018] E14 FUS=[YR=2018] E12 S8 STR=[YR=2018] S7 W12 N3 E9 N4 E3$ W3 S4 W9 N12$ S12 W14 N12$ N60$.

EXTRA FEATURES

LN	OB/XF CODE	DESCRIPTION	BLD	CAP	L	W	UNITS	UT	Adj R	ADJ UNIT PRICE	ORIG COND	YEAR ON	YEAR ACTUAL	Q	% COND	OB/XF MKT VALUE	NOTES
1	0504	FP-ELECTRI	0	100	0	0	2.00	UT	2,000.00	2,000.00	100	2018	2018	3	99	3,960	
2	0855	CONC PAVER	0	100	0	0	1,134.00	SF	7.00	7.00	100	2018	2018	3	98	7,779	
3	0855	CONC PAVER	0	100	0	0	396.00	SF	7.00	7.00	100	2018	2018	3	98	2,717	
4	0855	CONC PAVER	0	100	0	0	150.00	SF	7.00	7.00	100	2018	2018	3	98	1,029	
5	0855	CONC PAVER	0	100	6	4	24.00	SF	10.00	10.00	100	2018	2018	3	98	235	
6	1126	CB/STC 8"	0	100	0	0	276.00	SF	8.00	8.00	100	2018	2018	3	98	2,164	

LAND DESCRIPTION

TOTAL OB/XF 17,884

LN	USE CODE	CLS	LAND USE DESCRIPTION	CAP	RD	LOC ZONE	FRONT	DEPTH	TOT LND UTS	UNIT TYPE	DT	DPTH FACT	% COND	TOT ADJ	UNIT PRICE	ADJ UNIT PRICE	LAND VALUE	OTHER ADJUSTMENTS AND NOTES	YEAR	DENSITY	DECL	FRZ	YR	CONSRV
1	000100	C	SFR	100		PUD	0.00	0.00	1.00	LT		1.00	1.00	1.25	425,000.00	531,250.00	531,250							

REVIEW DATE 05/17/2018 BY DJ Total Acres: 0.00 Total Land Value: 531,250 Market: 0 Agricultural: 0 Common: 531,250 PRINTED 08/02/2023 BY SYS