LOT 67
IN OR 2186/1112
GOLFSIDE AT SUMMER BEACH #2

COLTON ANDREW & DEBORAH
95343 SPINNAKER DR
FERNANDINA BEACH, FL 32034

2023

00-SB-30-065B-0067-0000

BUILDING CHARACTERISTICS

ELEMENT	CD	CONSTRUCTION
Exterior Wall	10	ABOVE AVG 70
Exterior Wall	17	CB STUCCO 30
Roof Structur	03	GABLE/HIP 100
Roof Cover	03	COMP SHNGL 100
Interior Wall	05	DRYWALL 100
Interior Floo	12	HARDWOOD 60
Interior Floo	11	CLAY TILE 40
Air Condition	03	CENTRAL 100
Heating Type	04	AIR DUCTED 100
Bedrooms		3 100
Bathrooms		4 100
Frame	04	REIN CONC 100
Stories	3.	3. 100
Units		0 100
Quality	04	Quality Level 04
DOR CODE	0100	SINGLE FAMILY
MAP NUM		MKT AREA 03
NEIGHBORHOOD/LOC	3019.00	

AREA TYPE	TOTAL GROSS AREA	PCT OF BASE	TOT ADJ AREA	SUBAREA MARKET VALUE
BAL	192	15	29	5,915
BAS	1,554	100	1,554	316,993
BAS	1,582	100	1,582	322,705
FGR	355	55	195	39,777
FGR	504	55	277	56,504
FOP	240	30	72	14,687
FOP	240	30	72	14,687
FOP	396	30	119	24,274
FSP	363	40	145	29,577
FUS	135	100	135	27,538
TOTALS	7,151		5,527	1,127,428

MARKET ADJUSTMENTS

TYPE	MDL	EFF. AREA	TOT ADJ PTS	EFF. BASE RATE	REPL. COST NEW	AYB	EYB	ECON	FNCT		NORM	% COND
0500	11	5,527	144.0846	205.32	1,134,804	2020	2020	0	0	0	0.65	99.35

1 SFR CUST - 100% - 2021 Heated Area: 4591 HX Base Yr 2021

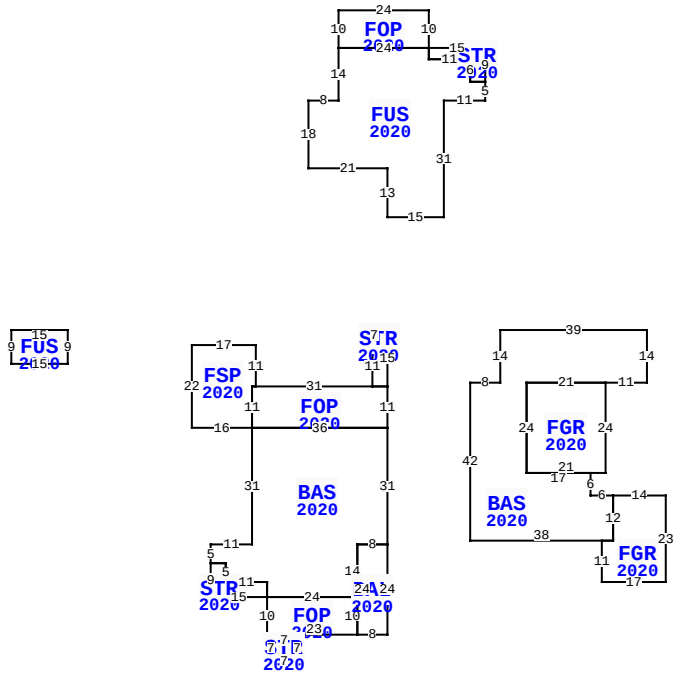

** This building has 15 Sub-Areas

95343 SPINNAKER DR, FERNANDINA BEACH

BLD DATE		LGL DATE	
XF DATE		LAND DATE	
INC DATE		AG DATE	

NASSAU COUNTY PROPERTY

PAGE 1 of 1 8

VALUATION SUMMARY

VALUATION BY		STANDARD
Tax Group: 8	Tax Dist:	
BUILDING MARKET VALUE		1,127,428
TOTAL MARKET OB/XF VALUE		83,564
TOTAL LAND VALUE - MARKET		425,000
TOTAL MARKET VALUE		1,635,992
SOH/AGL Deduction		370,573
ASSESSED VALUE		1,265,419
TOTAL EXEMPTION VALUE	HX HB	50,000
BASE TAXABLE VALUE		1,215,419
TOTAL JUST VALUE		1,635,992
NCON VALUE		0
INCOME VALUE		
PREVIOUS YEAR MKT VALUE		1,398,463

PERMIT NUM	DESCRIPTION	AMT	ISSUED
B2000933	SCRNRM	14,600	01/31/2020
B1904759	SWIM POOL	20,000	05/08/2019
B1901947	NEW CONSTR	600,401	02/27/2019

SALES DATA

OFF RECORD Number	DATE	TYPE INST	Q U	V I	RSN CD	SALE PRICE
2186/1112	3/29/2018	WD	Q	I	01	330,000
GRANTOR: VETTER KAREN						
GRANTEE: COLTON ANDREW & DEB						
1889/0061	11/06/2013	WD	Q	V	02	334,000
GRANTOR: SMITH WILLIAM E						
GRANTEE: VETTER KAREN						

BUILDING NOTES

BUILDING DIMENSIONS

STR=[YR=2020] W7 S4 E3 S11 FOP=[YR=2020] W31 FSP=[YR=2020] N11 W17 S22 E16 BAS=[YR=2020] S31 W11 S5 STR=[YR=2020] S9 E15 FOP=[YR=2020] S10 E1 STR=[YR=2020] S7 E7 N7 W7 $ E23 BAL=[YR=2020] E8 N24 W8 S24 $ N10 W24 $ N4 W11 N5 W4 $ E4 S5 E11 S4 E24 N14 E8 N31 W36 $ N11 E1 $ W1 S11 E36 N11 W4 $ E4 N15 $ PTR= E30 BAS=[YR=2020] E39 S14 W11 FGR=[YR=2020] W21 S24 E21 N24 $ W21 S24 E17 S6E6 FGR=[YR=2020] E14 S23 W17 N11 E3 N12 $ S12 W38 N42 E8 N14 $ W30 $ PTR= N30 FUS=[YR=2020] N13 W21 N18 E8 N14 FOP=[YR=2020] N10 E24 S10 W24 $ E24 STR=[YR=2020] E15 S9 W4 N6 W11 N3 $ S3 E11 S6 E4 S5 W11 S31 W15 $ S30 $ PTR= W100 FUS=[YR=2020] E15 S9 W15 N9 $ E100 $.

EXTRA FEATURES

LN	OB/XF CODE	DESCRIPTION	BLD	CAP	L	W	UNITS	UT	Adj R	ADJ UNIT PRICE	ORIG COND	YEAR ON	YEAR ACTUAL	Q	% COND	OB/XF MKT VALUE	NOTES
1	0855	CONC PAVER	0	100	0	0	2,348.00	SF	10.00	10.00	100	2020	2020	3	99	23,245	
2	0910	SCRN RM L	0	100	0	0	1,296.00	SF	15.00	15.00	100	2020	2020	3	93	18,079	
3	0504	FP-ELECTRI	0	100	0	0	1.00	UT	2,000.00	2,000.00	100	2020	2020	3	99	1,980	
5	0861	POOL GUNIT	0	100	0	0	280.00	SF	85.00	85.00	100	2020	2020	3	95	22,610	
6	0857	SANDSTONE	0	100	0	0	1,016.00	SF	16.00	16.00	100	2020	2020	3	100	16,256	
7	1126	CB/STC 8"	0	100	0	0	176.00	SF	8.00	8.00	100	2020	2020	3	99	1,394	

LAND DESCRIPTION

TOTAL OB/XF 83,564

LN	USE CODE	CLS	LAND USE DESCRIPTION	CAP	RD	LOC ZONE	FRONT	DEPTH	TOT LND UTS	UNIT TYPE	DT	DPTH FACT	% COND	TOT ADJ	UNIT PRICE	ADJ UNIT PRICE	LAND VALUE	OTHER ADJUSTMENTS AND NOTES	YEAR	DENSITY	DECL	FRZ	YR	CONSRV
1	000140	C	SFR GOLF A	100		PUD	0.00	0.00	1.00	LT		1.00	1.00	1.00	425,000.00	425,000.00	425,000							

REVIEW DATE 01/15/2021 BY RK Total Acres: 0.00 Total Land Value: 425,000 Market: 0 Agricultural: 0 Common: 425,000 PRINTED 08/02/2023 BY SYS