LOT 74
IN OR 1782/1591
GOLFSIDE AT SUMMER BEACH #1

FERRARA RITA B
4683 GENOA DR
FERNANDINA BEACH, FL 32034

2023

00-SB-30-065A-0074-0000

BUILDING CHARACTERISTICS

ELEMENT	CD	CONSTRUCTION
Exterior Wall	16	WD FR STUC 100
Roof Structur	03	GABLE/HIP 100
Roof Cover	03	COMP SHNGL 100
Interior Wall	05	DRYWALL 100
Interior Floo	14	CARPET 90
Interior Floo	12	HARDWOOD 10
Air Condition	03	CENTRAL 100
Heating Type	04	AIR DUCTED 100
Bedrooms		4 100
Bathrooms		3.5 100
Frame	02	WOOD FRAME 100
Stories	2.	2. 100
Units		0 100
Occupancy	00	NONE 100
Quality	04	Quality Level 04
DOR CODE	0100	SINGLE FAMILY
MAP NUM		MKT AREA 03
NEIGHBORHOOD/LOC	3019.00	

AREA TYPE	TOTAL GROSS AREA	PCT OF BASE	TOT ADJ AREA	SUBAREA MARKET VALUE
BAS	2,309	100	2,309	282,034
FGR	714	55	393	48,003
FOP	89	30	27	3,298
FOP	333	30	100	12,215
FST	27	55	15	1,832
FST	45	55	25	3,054
FUS	1,093	100	1,093	133,505
UOP	291	20	58	7,085
TOTALS	4,901		4,020	491,024

MARKET ADJUSTMENTS

TYPE	MDL	EFF. AREA	TOT ADJ PTS	EFF. BASE RATE	REPL. COST NEW	AYB	EYB	ECON	FNCT		NORM	% COND
0500	01	4,020	100.2540	142.86	574,297	1993	1993	0	0	0	14.50	85.50

1 SFR CUST – 100% - 2015 Heated Area: 3402 HX Base Yr 2015

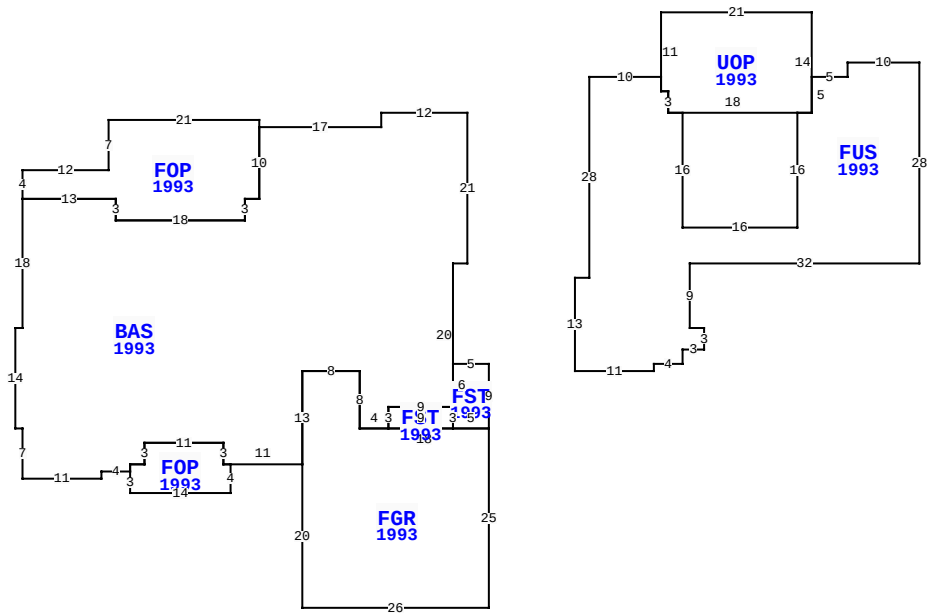

4683 GENOA DR, FERNANDINA BEACH

BLD DATE		LGL DATE	
XF DATE		LAND DATE	
INC DATE		AG DATE	

NASSAU COUNTY PROPERTY

VALUATION SUMMARY

VALUATION BY		STANDARD
Tax Group: 8	Tax Dist:	
BUILDING MARKET VALUE		491,024
TOTAL MARKET OB/XF VALUE		5,923
TOTAL LAND VALUE - MARKET		425,000
TOTAL MARKET VALUE		921,947
SOH/AGL Deduction		295,895
ASSESSED VALUE		626,052
TOTAL EXEMPTION VALUE	HX HB	50,000
BASE TAXABLE VALUE		576,052
TOTAL JUST VALUE		921,947
NCON VALUE		0
INCOME VALUE		
PREVIOUS YEAR MKT VALUE		797,681

PERMIT NUM	DESCRIPTION	AMT	ISSUED
B1428201	WALLUNDER	11,200	01/01/2014
B9300180	NEW CONSTR	140,935	04/01/1993

SALES DATA

OFF RECORD Number	DATE	TYPE INST	Q / U	V / I	RSN CD	SALE PRICE
1782/1591	3/01/2012	WD	U	I	11	100
GRANTOR: TAYLOR VIRGINIA L & P						
GRANTEE: FERRARA RITA B						
1781/0015	3/01/2012	WD	U	I	35	800,000
GRANTOR: TAYLOR VIGINIA L & PH						
GRANTEE: FERRARA RITA B						

BUILDING NOTES

BUILDING DIMENSIONS

BAS=[YR=1993] W12 S2 W17 FOP=[YR=1993] N1 W21 S7 W12 S4 E13 S3 E18 N3 E2 N10 $ S10 W2 S3 W18 N3 W13 S18 W1 S14 E1 S7 E11 N1 E4 FOP=[YR=1993] S3 E14 N4 W1N3 W11 S3 W2 S1 $ N1 E2 N3 E11 S3 E11 FGR=[YR=1993] S20 E26 N25 FST=[YR=1993] N9 W5 S6 FST=[YR=1993] W9 S3 E9 N3 $ S3 E5 $ W18 N8 W8 S13 $ N13 E8 S8 E4 N3 E9 N20 E2 N21 $ PTR= E30 FUS=[YR=1993] S16E16 N16UOP=[YR=1993] E2 N14 W21S11E1S3E18$E2N5E5 N2E10 S28W32S9E2S3W3 S2W4 S1W11 N13 E2 N28E10S2E1S3E2$ W30 $.

EXTRA FEATURES

LN	OB/XF CODE	DESCRIPTION	BLD	CAP	L	W	UNITS	UT	Adj R	ADJ UNIT PRICE	ORIG COND	YEAR ON	YEAR ACTUAL	Q	% COND	OB/XF MKT VALUE	NOTES
1	0504	FP-ELECTRI	0	100	0	0	1.00	UT	2,000.00	2,000.00	100	1993	1993	3	76	1,520	
2	0811	CONCRETE B	0	100	32	24	768.00	SF	5.20	5.20	100	1993	1993	3	68	2,716	
3	0810	CONCRETE A	0	100	0	0	122.00	SF	6.50	6.50	100	1993	1993	3	68	539	
4	0810	CONCRETE A	0	100	0	0	180.00	SF	6.50	6.50	100	1993	1993	3	68	796	
5	1242	WD DECK A	0	100	0	0	115.00	SF	10.00	10.00	100	1993	1993	3	20	230	
6	0835	QUARY TILE	0	100	9	2	18.00	SF	10.00	10.00	100	1993	1993	3	68	122	

LAND DESCRIPTION

TOTAL OB/XF 5,923

LN	USE CODE	CLS	LAND USE DESCRIPTION	CAP	RD	LOC ZONE	FRONT	DEPTH	TOT LND UTS	UNIT TYPE	DT	DPTH FACT	% COND	TOT ADJ	UNIT PRICE	ADJ UNIT PRICE	LAND VALUE	OTHER ADJUSTMENTS AND NOTES	YEAR	DENSITY	DECL	FRZ	YR	CONSRV
1	000140	C	SFR GOLF A	100	0003	PUD	0.00	0.00	1.00	LT		1.00	1.00	1.00	425,000.00	425,000.00	425,000							

REVIEW DATE 07/29/2019 BY DJA Total Acres: 0.00 Total Land Value: 425,000 Market: 0 Agricultural: 0 Common: 425,000 PRINTED 08/02/2023 BY SYS