LOT 27 IN OR 790/802
GOLFSIDE AT SUMMER BEACH #1
PB 5/114-118

HARTIG ROBERT J & JANET E
1610 REGATTA DRIVE
FERNANDINA BEACH, FL 32034

2023

00-SB-30-065A-0027-0000

NASSAU COUNTY PROPERTY

BUILDING CHARACTERISTICS

ELEMENT	CD	CONSTRUCTION
Exterior Wall	23	REINF CONC 90
Exterior Wall	16	WD FR STUC 10
Roof Structur	08	IRREGULAR 100
Roof Cover	03	COMP SHNGL 100
Interior Wall	05	DRYWALL 100
Interior Floo	12	HARDWOOD 70
Interior Floo	14	CARPET 30
Air Condition	03	CENTRAL 100
Heating Type	04	AIR DUCTED 100
Bedrooms		3 100
Bathrooms		3.5 100
Frame	02	WOOD FRAME 100
Stories	2.	2. 100
Units		0 100
Quality	04	Quality Level 04
DOR CODE	0100	SINGLE FAMILY
MAP NUM		MKT AREA 03
NEIGHBORHOOD/LOC	3019.00	

AREA TYPE	TOTAL GROSS AREA	PCT OF BASE	TOT ADJ AREA	SUBAREA MARKET VALUE
BAS	2,847	100	2,847	516,773
FGR	564	55	310	56,270
FOP	72	30	22	3,993
FOP	88	30	26	4,719
FOP	135	30	40	7,260
FOP	170	30	51	9,257
FUS	362	100	362	65,708
PTO	15	5	1	182
PTO	52	5	3	544
UOP	16	20	3	544
TOTALS	4,615		3,748	680,318

MARKET ADJUSTMENTS

TYPE	MDL	EFF. AREA	TOT ADJ PTS	EFF. BASE RATE	REPL. COST NEW	AYB	EYB	ECON	FNCT		NORM	% COND
0500	11	3,748	142.3224	202.81	760,132	2001	2001	0	0	0	10.50	89.50

1 SFR CUST – 100% - 2002 Heated Area: 3209 HX Base Yr 2002

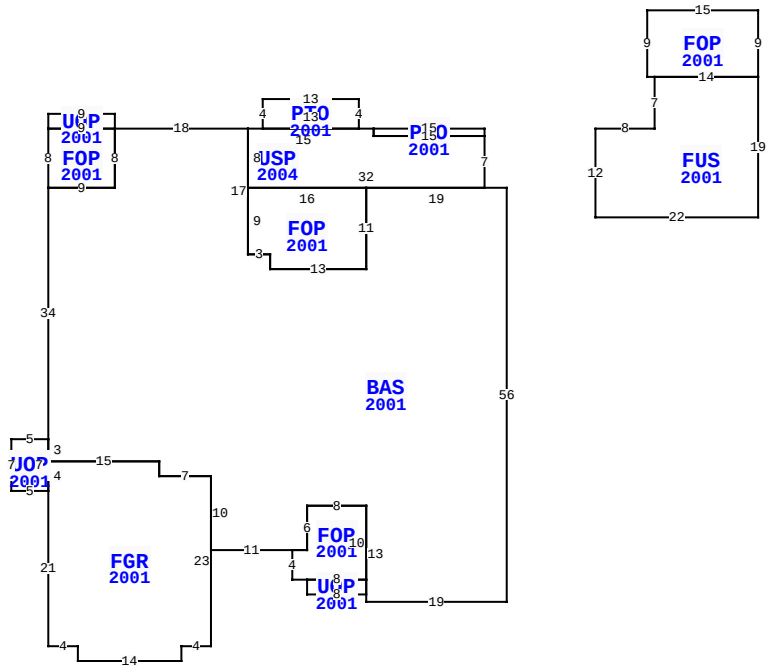

** This building has 13 Sub-Areas

1610 REGATTA DR, FANDINAVA BEACH

BLD DATE		LGL DATE	
XF DATE		LAND DATE	
INC DATE		AG DATE	

VALUATION SUMMARY

VALUATION BY		STANDARD
Tax Group: 8	Tax Dist:	
BUILDING MARKET VALUE		680,318
TOTAL MARKET OB/XF VALUE		16,631
TOTAL LAND VALUE - MARKET		425,000
TOTAL MARKET VALUE		1,121,949
SOH/AGL Deduction		472,456
ASSESSED VALUE		649,493
TOTAL EXEMPTION VALUE	HX HB	50,000
BASE TAXABLE VALUE		599,493
TOTAL JUST VALUE		1,121,949
NCON VALUE		0
INCOME VALUE		
PREVIOUS YEAR MKT VALUE		964,020

PERMIT NUM	DESCRIPTION	AMT	ISSUED
B0412545	ADDITION	2,972	03/01/2004
B007249	NEW CONSTR	400,000	06/01/2000

SALES DATA

OFF RECORD Number	DATE	TYPE INST	Q U	V I	RSN CD	SALE PRICE
0790/0802	4/15/1997	WD	Q	V		86,000
GRANTOR: CONSTANT ALEXANDER E						
GRANTEE: HARTIG ROBERT J & J						
0640/0722	11/06/1991	WD	Q	V		65,000
GRANTOR: CRAIG BIRKELBACH						
GRANTEE: ALEXANDER E CONSTAN						

BUILDING NOTES

BUILDING DIMENSIONS

PTO=[YR=2001] W15 USP=[YR=2004] W2 PTO=[YR=2001] N4 W13 S4E13 $ W15 BAS=[YR=2001] W18UOP=[YR=2001] N2 W9 S2 FOP=[YR=2001] S8 E9 N8 W9 $ E9 $ S8 W9 S34 UOP=[YR=2001] W5 S7 E5 FGR=[YR=2001] S21 E4 S2 E14 N2 E4 N23 W7 N2 W15 S4 $ N7 $ S3 E15 S2 E7 S10 E11 FOP=[YR=2001] S4 E2 UOP=[YR=2001] S2 E8 N2 W8 $ E8 N10 W8 S6 W2 $ E2 N6 E8 S13 E19 N56 W19 FOP=[YR=2001] S11 W13 N2 W3 N9 E16 $ S11 W13 N2 W3 N17 $ S8 E32 N7 W15 N1 $ S1 E15 N1 $ PTR= E15 FUS=[YR=2001] E8 N7 FOP=[YR=2001] W1 N9 E15 S9 W14 $ E14 S19 W22 N12 $ W15 $.

EXTRA FEATURES

LN	OB/XF CODE	DESCRIPTION	BLD	CAP	L	W	UNITS	UT	Adj R	ADJ UNIT PRICE	ORIG COND	YEAR ON	YEAR ACTUAL	Q	% COND	OB/XF MKT VALUE	NOTES
1	0500	FP-PRE FAB	0	100	0	0	1.00	UT	3,500.00	3,500.00	100	2001	2001	3	86	3,010	
2	0855	CONC PAVER	0	100	0	0	1,443.00	SF	10.00	10.00	100	2001	2001	3	82	11,833	
3	0855	CONC PAVER	0	100	0	0	218.00	SF	10.00	10.00	100	2001	2001	3	82	1,788	

LAND DESCRIPTION

TOTAL OB/XF 16,631

LN	USE CODE	CLS	LAND USE DESCRIPTION	CAP	RD	LOC ZONE	FRONT	DEPTH	TOT LND UTS	UNIT TYPE	DT	DPTH FACT	% COND	TOT ADJ	UNIT PRICE	ADJ UNIT PRICE	LAND VALUE	OTHER ADJUSTMENTS AND NOTES	YEAR	DENSITY	DECL	FRZ	YR	CONSRV
1	000140	C	SFR GOLF A	100		PUD	0.00	0.00	1.00	LT		1.00	1.00	1.00	425,000.00	425,000.00	425,000							

REVIEW DATE 04/12/2017 BY DJX Total Acres: 0.00 Total Land Value: 425,000 Market: 0 Agricultural: 0 Common: 425,000 PRINTED 08/02/2023 BY SYS