LOT 38
ENCLAVE AT SUMMER BEACH
REVISION ONE PBK 8/277

ROTUNNO MELISSA REV TRUST/ROTUNNO MELISSA TRUSTEE
3462 NORTH LINCOLN AVENUE #303
CHICAGO, IL 60657

2023

00-SB-30-046E-0038-0000

NASSAU COUNTY PROPERTY

BUILDING CHARACTERISTICS

ELEMENT	CD	CONSTRUCTION
Exterior Wall	16	WD FR STUC 100
Roof Structur	03	GABLE/HIP 100
Roof Cover	08	CLAY TILE 100
Interior Wall	05	DRYWALL 100
Interior Floo	11	CLAY TILE 50
Interior Floo	12	HARDWOOD 50
Air Condition	03	CENTRAL 100
Heating Type	04	AIR DUCTED 100
Bedrooms		3 100
Bathrooms		2.5 100
Frame	02	WOOD FRAME 100
Stories	2.	2. 100
Units		0 100
Quality	06	Quality Level 06

DOR CODE	0100	SINGLE FAMILY	
MAP NUM		MKT AREA	03
NEIGHBORHOOD/LOC	3043.100		

AREA TYPE	TOTAL GROSS AREA	PCT OF BASE	TOT ADJ AREA	SUBAREA MARKET VALUE
BAS	727	100	727	119,044
FGR	416	55	229	37,498
FOP	60	30	18	2,947
FOP	64	30	19	3,112
FOP	72	30	22	3,603
FOP	72	30	22	3,603
FST	36	55	20	3,275
FST	54	55	30	4,912
FUS	1,260	100	1,260	206,320
TOTALS	2,761		2,347	384,312

MARKET ADJUSTMENTS

TYPE	MDL	EFF. AREA	TOT ADJ PTS	EFF. BASE RATE	REPL. COST NEW	AYB	EYB	ECON	FNCT		NORM	% COND
0320	11	2,347	174.1068	165.40	388,194	2020	2020	0	0	0	1.00	99.00

1 TOWNHOUSE - 0% - 0 Heated Area: 1987 HX Base Yr

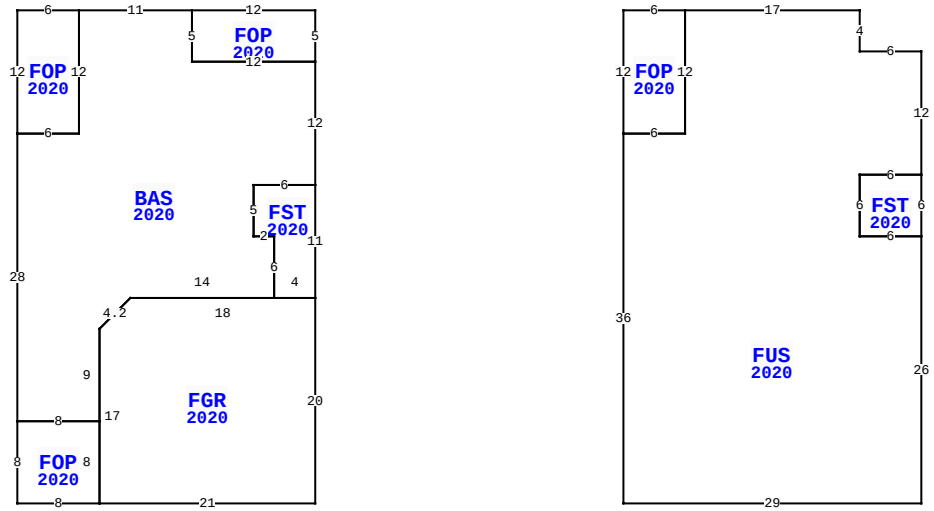

96125 HANGING MOSS DR, FERNANDINA BEACH

BLD DATE		LGL DATE	
XF DATE		LAND DATE	
INC DATE		AG DATE	

VALUATION SUMMARY

VALUATION BY	STANDARD
Tax Group: 8	Tax Dist:
BUILDING MARKET VALUE	384,312
TOTAL MARKET OB/XF VALUE	11,426
TOTAL LAND VALUE - MARKET	115,000
TOTAL MARKET VALUE	510,738
SOH/AGL Deduction	20,265
ASSESSED VALUE	490,473
TOTAL EXEMPTION VALUE	0
BASE TAXABLE VALUE	490,473
TOTAL JUST VALUE	510,738
NCON VALUE	0
INCOME VALUE	
PREVIOUS YEAR MKT VALUE	473,169

PERMIT NUM	DESCRIPTION	AMT	ISSUED
B2001578	NEW CONSTR	271,744	02/20/2020

SALES DATA

OFF RECORD Number	DATE	TYPE INST	Q U	V I	RSN CD	SALE PRICE
2399/1814	10/09/2020	SW	Q	I	02	479,000
GRANTOR: ARTISAN HOMES LLC						
GRANTEE: ROTUNNO MELISSA REV						
2170/0137	1/10/2018	SW	Q	V	05	3,900,000
GRANTOR: BIGHT ENTERPRISES LLC						
GRANTEE: ARTISAN HOMES LLC						

BUILDING NOTES

BUILDING DIMENSIONS

FOP=[YR=2020] W12 BAS=[YR=2020] W11 FOP=[YR=2020] W6 S12 E6 N12 $ S12 W6 S28 FOP=[YR=2020] S8 E8 FGR=[YR=2020] E21 N20 FST=[YR=2020] N11 W6 S5 E2 S6 E4 $ W18 D3 L3 S17 $ N8 W8 $E8 N9 U3 R3 E14 N6 W2 N5 E6 N12 W12 N5 $S5 E12 N5$ PTR= E30 FOP=[YR=2020] E6 FUS=[YR=2020] E17 S4 E6 S12 FST=[YR=2020] W6 S6 E6 N6 $ W6 S6 E6 S26 W29 N36 E6 N12 $ S12 W6 N12 $ W30 $.

EXTRA FEATURES

LN	OB/XF CODE	DESCRIPTION	BLD	CAP	L	W	UNITS	UT	Adj R	ADJ UNIT PRICE	ORIG COND	YEAR ON	YEAR ACTUAL	Q	% COND	OB/XF MKT VALUE	NOTES
1	0855	CONC PAVER	0	0	0	0	144.00	SF	10.00	10.00	100	2020	2020	3	99	1,426	
2	0410	ELEVATOR	0	0	0	0	1.00	UT	10,000.00	10,000.00	100	2020	2020	3	100	10,000	

LAND DESCRIPTION

TOTAL OB/XF 11,426

LN	USE CODE	CLS	LAND USE DESCRIPTION	CAP	RD	LOC ZONE	FRONT	DEPTH	TOT LND UTS	UNIT TYPE	DT	DPTH FACT	% COND	TOT ADJ	UNIT PRICE	ADJ UNIT PRICE	LAND VALUE	OTHER ADJUSTMENTS AND NOTES	YEAR	DENSITY	DECL	FRZ	YR	CONSRV
1	000100	C	SFR	0			0.00	0.00	1.00	LT		1.00	1.00	1.00	115,000.00	115,000.00	115,000							

REVIEW DATE 10/12/2020 BY RK Total Acres: 0.00 Total Land Value: 115,000 Market: 0 Agricultural: 0 Common: 115,000 PRINTED 08/02/2023 BY SYS