BLOCK 271 PT LOT 11 EAST
OF SAR R/W & LOT 23
IN OR 2364/649

RITCH TIM & DONNA/KAVALIEROS NICK ET AL
89 OCEAN COURSE DR
PONTE VEDRA BEACH, FL 32082

2023

00-00-31-1800-0271-0110

BUILDING CHARACTERISTICS

ELEMENT	CD	CONSTRUCTION
Exterior Wall	10	ABOVE AVG 70
Exterior Wall	20	FACE BRICK 30
Roof Structur	01	FLAT 100
Roof Cover	04	BUILT-UP 100
Interior Wall	05	DRYWALL 100
Interior Floo	11	CLAY TILE 90
Interior Floo	12	HARDWOOD 10
Air Condition	03	CENTRAL 100
Heating Type	04	AIR DUCTED 100
Bedrooms		3 100
Bathrooms		2.5 100
Frame	03	MASONRY 100
Stories	3.	3. 100
Units		0 100
Quality	04	Quality Level 04
DOR CODE	0100	SINGLE FAMILY
MAP NUM		MKT AREA 01
NEIGHBORHOOD/LOC	1004.00	

AREA TYPE	TOTAL GROSS AREA	PCT OF BASE	TOT ADJ AREA	SUBAREA MARKET VALUE
BAS	1,180	100	1,180	236,025
FGR	350	55	192	38,404
FOP	42	30	13	2,601
FOP	220	30	66	13,201
FOP	220	30	66	13,201
FUS	1,450	100	1,450	290,031
STR	80	10	8	1,601
STR	92	10	9	1,800
UOP	84	20	17	3,400
UOP	1,438	20	288	57,606
TOTALS	5,156		3,289	657,869

MARKET ADJUSTMENTS

TYPE	MDL	EFF. AREA	TOT ADJ PTS	EFF. BASE RATE	REPL. COST NEW	AYB	EYB	ECON	FNCT		NORM	% COND
0500	11	3,289	142.3277	202.82	667,075	2019	2019	0	0	0	1.38	98.62

1 SFR CUST – 0% - 0 Heated Area: 2630 HX Base Yr

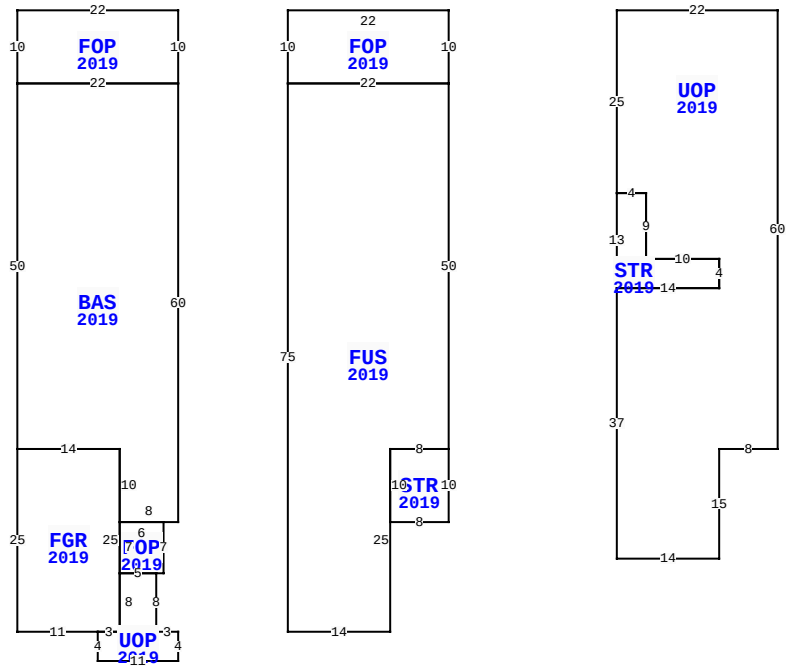

117 S 2ND ST, FERNANDINA BEACH

BLD DATE		LGL DATE	
XF DATE		LAND DATE	
INC DATE		AG DATE	

NASSAU COUNTY PROPERTY

PAGE 1 of 1 2

VALUATION SUMMARY

VALUATION BY	STANDARD
Tax Group: 2	Tax Dist:
BUILDING MARKET VALUE	657,869
TOTAL MARKET OB/XF VALUE	3,148
TOTAL LAND VALUE - MARKET	191,675
TOTAL MARKET VALUE	852,692
SOH/AGL Deduction	0
ASSESSED VALUE	852,692
TOTAL EXEMPTION VALUE	0
BASE TAXABLE VALUE	852,692
TOTAL JUST VALUE	852,692
NCON VALUE	0
INCOME VALUE	
PREVIOUS YEAR MKT VALUE	778,321

PERMIT NUM	DESCRIPTION	AMT	ISSUED
20181641	CO ISSUED	0	12/23/2019
20181641	NEW CONSTR	338,272	05/15/2018
20171904	DEMOLITION	31,500	06/20/2017

SALES DATA

OFF RECORD Number	DATE	TYPE INST	Q U	V I	RSN CD	SALE PRICE
2364/0649	5/26/2020	WD	U	I	30	130,000
GRANTOR: WAYA EQUANI LLC						
GRANTEE: RITCH TIM & DONNA E						
2250/1956	1/25/2019	SW	U	V	37	193,500
GRANTOR: ARTISAN HOMES LLC						
GRANTEE: WAYA EQUANI LLC						

BUILDING NOTES

BUILDING DIMENSIONS

FOP=[YR=2019] W22 S10 BAS=[YR=2019] S50 FGR=[YR=2019] S25 E11 UOP=[YR=2019] S4 E11 N4 W3 N8 FOP=[YR=2019] E1 N7 W6 S7 E5$ W5 S8 W3$ E3 N25 W14$ E14 S10 E8 N60 W22 $ E22 N10$ PTR= E15 FOP=[YR=2019] E22 S10 FUS=[YR=2019] S50 STR=[YR=2019] S10 W8 N10 E8$ W8 S25 W14 N75 E22$ W22 N10$ W15$ PTR=E60 UOP=[YR=2019] E22 S60 W8 S15 W14 N37 STR=[YR=2019] N13 E4 S9 E10 S4 W14$ E14 N4 W10 N9 W4 N25$ W60$.

EXTRA FEATURES

LN	OB/XF CODE	DESCRIPTION	BLD	CAP	L	W	UNITS	UT	Adj R	ADJ UNIT PRICE	ORIG COND	YEAR ON	YEAR ACTUAL	Q	% COND	OB/XF MKT VALUE	NOTES
1	0855	CONC PAVER	0	0	0	0	318.00	SF	10.00	10.00	100	2019	2019	3	99	3,148	

LAND DESCRIPTION

TOTAL OB/XF 3,148

LN	USE CODE	CLS	LAND USE DESCRIPTION	CAP	RD	LOC ZONE	FRONT	DEPTH	TOT LND UTS	UNIT TYPE	DT	DPTH FACT	% COND	TOT ADJ	UNIT PRICE	ADJ UNIT PRICE	LAND VALUE	OTHER ADJUSTMENTS AND NOTES	YEAR	DENSITY	DECL	FRZ	YR	CONSRV
1	000100	C	SFR	0	0003	MU-1	0.00	0.00	3,485.00	SF		1.00	1.00	1.00	55.00	55.00	191,675							

REVIEW DATE 12/31/2019 BY DJ Total Acres: 0.00 Total Land Value: 191,675 Market: 0 Agricultural: 0 Common: 191,675 PRINTED 08/02/2023 BY SYS