BLOCK 270 LOTS 27 & 28
IN OR 1754/1419
CITY OF FDNA BEACH

DONGO JULIO LIVING TRUST/DONGO JULIO TRUSTEE
2727 N OCEAN BLVD APT A208
BOCA RATON, FL 33431

2023

00-00-31-1800-0270-0270

NASSAU COUNTY PROPERTY

BUILDING CHARACTERISTICS

ELEMENT	CD	CONSTRUCTION
Exterior Wall	04	SINGLE SID 100
Roof Structur	04	WOOD TRUSS 100
Roof Cover	01	MINIMUM 100
Interior Wall	05	DRYWALL 100
Interior Floo	12	HARDWOOD 100
Ceiling	02	F.NOT SUS 100
Air Condition	03	CENTRAL 100
Heating Type	04	AIR DUCTED 100
Fixtures		9 100
Frame	02	WOOD FRAME 100
Story Height		10 100
RMS		10 100
Stories	2.	2. 100
Units		0 100
BUD8 Adjustme	02	DIST FB 100
Occupancy	00	NONE 100
Quality	03	Quality Level 03
DOR CODE	1100	STORES, 1 STORY
MAP NUM		MKT AREA 01
NEIGHBORHOOD/LOC	1005.0400	

AREA TYPE	TOTAL GROSS AREA	PCT OF BASE	TOT ADJ AREA	SUBAREA MARKET VALUE
AOF	144	100	144	13,485
BAS	77	100	77	7,211
BAS	77	100	77	7,211
BAS	336	100	336	31,464
BAS	682	100	682	63,865
BAS	832	100	832	77,911
BAS	84	100	84	7,866
FOP	132	30	40	3,745
UOP	132	20	26	2,435
TOTALS	2,496		2,298	215,192

MARKET ADJUSTMENTS

TYPE	MDL	EFF. AREA	TOT ADJ PTS	EFF. BASE RATE	REPL. COST NEW	AYB	EYB	ECON	FNCT		NORM	% COND
1101	04	2,298	88.7775	130.06	298,878	1900	1995	0	0	0	28.00	72.00

1 RETAILSTOR – 0% - 0 Heated Area: 2232 HX Base Yr

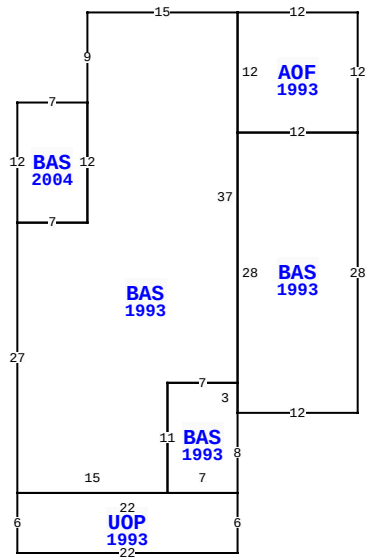

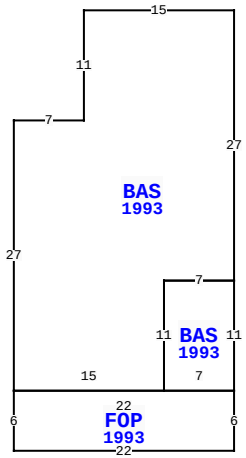

218 ASH ST, FERNANDINA BEACH

BLD DATE	01/07/2022	KK	LGL DATE	
XF DATE	01/07/2022	KK	LAND DATE	01/07/2022 KK
INC DATE	05/13/2023	REA	AG DATE	

VALUATION SUMMARY

VALUATION BY		STANDARD
Tax Group: 2	Tax Dist:	
BUILDING MARKET VALUE		297,131
TOTAL MARKET OB/XF VALUE		17,911
TOTAL LAND VALUE - MARKET		300,000
TOTAL MARKET VALUE		615,042
SOH/AGL Deduction		205,820
ASSESSED VALUE		409,222
TOTAL EXEMPTION VALUE	HI	0
BASE TAXABLE VALUE		409,222
TOTAL JUST VALUE		615,042
NCON VALUE		0
INCOME VALUE		596,100
PREVIOUS YEAR MKT VALUE		526,690

PERMIT NUM	DESCRIPTION	AMT	ISSUED
20150234	BRIGHT MORNINGS	0	02/05/2015
20112288	ADDITION	40,000	12/28/2011
20112289	REPAIR/RRF	5,500	12/28/2011
20101015	REPAIR/RRF	1,500	06/17/2010
20090031	REPAIR/RRF	1,000	01/09/2009
20080454	REPAIR/RRF	1,100	03/18/2008

SALES DATA

OFF RECORD Number	DATE	TYPE INST	Q U	V I	RSN CD	SALE PRICE
1754/1419	9/01/2011	WD	Q	I	02	500,000
GRANTOR: GOLDMAN LOUIS E JR &						
GRANTEE: DONGO JULIO TRUSTEE						
0883/0436	5/14/1999	WD	U	I	22	281,000
GRANTOR: GARVIN MARTHA S F/K/A						
GRANTEE: GOLDMAN LOUIS E JR						

BUILDING NOTES

BUILDING DIMENSIONS

AOF=[YR=1993] W12 BAS=[YR=1993] W15 S9 BAS=[YR=2004] W7 S12 E7 N12$ S12 W7 S27 UOP=[YR=1993] S6 E22 N6 BAS=[YR=1993] N8 BAS=[YR=1993] E12 N28 W12 S28 $ N3 W7 S11 E7 $ W22 $ E15 N11 E7 N37 $ S12 E12 N12 $ PTR= E15 BAS=[YR=1993] E7 N11 E15 S27 BAS=[YR=1993] S11 FOP=[YR=1993] S6 W22 N6 E22 $ W7 N11 E7 $ W7 S11 W15 N27 $ W15 $.

EXTRA FEATURES

LN	OB/XF CODE	DESCRIPTION	BLD	CAP	L	W	UNITS	UT	Adj R	ADJ UNIT PRICE	ORIG COND	YEAR ON	YEAR ACTUAL	Q	% COND	OB/XF MKT VALUE	NOTES
1	0811	CONCRETE B	0	0	21	27	567.00	SF	5.20	5.20	100	1984	1984	3	47	1,386	
2	0504	FP-ELECTRI	0	0	0	0	1.00	UT	1,000.00	1,000.00	100	1990	1990	3	70	700	
3	1242	WD DECK A	0	0	0	0	233.00	SF	10.00	10.00	100	2000	2000	3	20	466	
4	0097	AWNING CN	0	0	3	10	30.00	SF	65.00	65.00	100	2000	2000	3	40	780	
5	0825	BRICK	0	0	0	0	870.00	SF	12.50	12.50	100	1995	1995	3	91	9,896	
6	1076	TRELLIS A	0	0	12	13	156.00	SF	7.50	7.50	100	2000	2000	3	27	316	
7	0851	PATIO STON	0	0	6	8	48.00	SF	0.75	0.75	100	2000	2000	3	80	29	
9	0462	ST/AL FNC	0	0	47	6	282.00	SF	10.00	10.00	100	2000	2000	3	29	818	
10	0443	STK FNC 6'	0	0	0	0	16.00	LF	10.00	10.00	100	2005	2005	3	27	43	
11	0964	HALON SYST	0	0	6	3	18.00	SF	50.00	50.00	100	2005	2005	3	87	783	

TOTAL OB/XF 15,217

LAND DESCRIPTION

LN	USE CODE	CLS	LAND USE DESCRIPTION	CAP	RD	LOC ZONE	FRONT	DEPTH	TOT LND UTS	UNIT TYPE	DT	DPTH FACT	% COND	TOT ADJ	UNIT PRICE	ADJ UNIT PRICE	LAND VALUE	OTHER ADJUSTMENTS AND NOTES	YEAR	DENSITY	DECL	FRZ	YR	CONSRV
1	001100	C	STORE 1FLR	0	0003	C-3	50.00	100.00	5,000.00	SF		1.00	1.00	1.00	60.00	60.00	300,000							

REVIEW DATE 01/07/2022 BY KK Total Acres: 0.00 Total Land Value: 300,000 Market: 0 Agricultural: 0 Common: 300,000 PRINTED 08/02/2023 BY SYS

BLOCK 270 LOTS 27 & 28
IN OR 1754/1419
CITY OF FDNA BEACH

DONGO JULIO LIVING TRUST/DONGO JULIO TRUSTEE
2727 N OCEAN BLVD APT A208
BOCA RATON, FL 33431

2023

00-00-31-1800-0270-0270

NASSAU COUNTY PROPERTY

BUILDING CHARACTERISTICS

ELEMENT	CD	CONSTRUCTION
Exterior Wall	10	ABOVE AVG 100
Roof Structur	04	WOOD TRUSS 100
Roof Cover	01	MINIMUM 100
Interior Wall	01	MINIMUM 80
Interior Wall	05	DRYWALL 20
Interior Floo	07	CORK/VTILE 80
Interior Floo	03	CONC FINSH 20
Ceiling	02	F.NOT SUS 100
Air Condition	03	CENTRAL 100
Heating Type	04	AIR DUCTED 100
Fixtures		8 100
Frame	02	WOOD FRAME 100
Story Height		8 100
RMS		4 100
Stories	1.	1. 100
Units		0 100
Occupancy	00	NONE 100
Quality	03	Quality Level 03
DOR CODE	1100	STORES, 1 STORY
MAP NUM		MKT AREA 01
NEIGHBORHOOD/LOC	1005.0400	

AREA TYPE	TOTAL GROSS AREA	PCT OF BASE	TOT ADJ AREA	SUBAREA MARKET VALUE
BAS	532	100	532	36,911
BAS	170	100	170	11,795
BAS	120	100	120	8,326
BAS	128	100	128	8,881
BAS	160	100	160	11,101
CDN	204	35	71	4,926
TOTALS	1,314		1,181	81,939

MARKET ADJUSTMENTS

TYPE	MDL	EFF. AREA	TOT ADJ PTS	EFF. BASE RATE	REPL. COST NEW	AYB	EYB	ECON	FNCT		NORM	% COND
2102	04	1,181	89.9640	177.90	210,100	1984	1995	0	0	0	61.00	39.00

2 RSTARANT 2 – 0% - 0 Heated Area: 1110 HX Base Yr

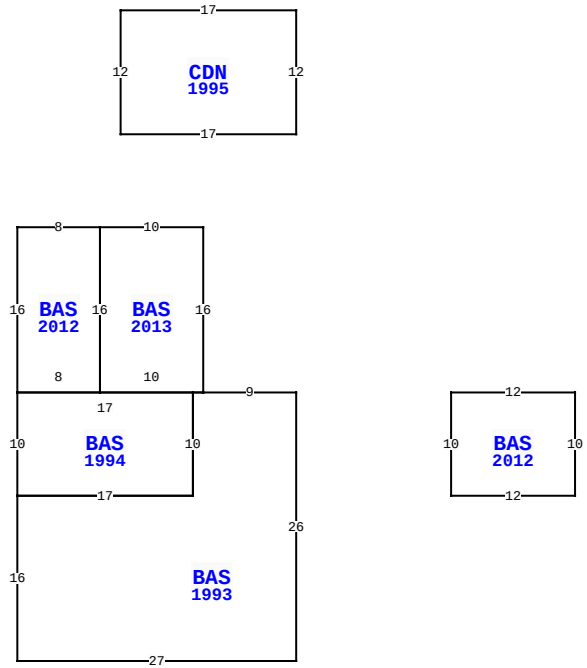

218 ASH ST, FERNANDINA BEACH

BLD DATE	01/07/2022	KK	LGL DATE		
XF DATE	01/07/2022	KK	LAND DATE	01/07/2022	KK
INC DATE	05/13/2023	REA	AG DATE		

VALUATION SUMMARY

VALUATION BY		STANDARD
Tax Group: 2	Tax Dist:	
BUILDING MARKET VALUE		297,131
TOTAL MARKET OB/XF VALUE		17,911
TOTAL LAND VALUE - MARKET		300,000
TOTAL MARKET VALUE		615,042
SOH/AGL Deduction		205,820
ASSESSED VALUE		409,222
TOTAL EXEMPTION VALUE	HI	0
BASE TAXABLE VALUE		409,222
TOTAL JUST VALUE		615,042
NCON VALUE		0
INCOME VALUE		596,100
PREVIOUS YEAR MKT VALUE		526,690

PERMIT NUM	DESCRIPTION	AMT	ISSUED
20071192	H/AC	1,650	06/27/2007
20052902	SIGN	1,000	10/21/2005
20032307	ADDITION	5,000	01/08/2003
20010658	XFOB	2,000	04/16/2001
20010665	XFOB	1,000	04/16/2001
991869	REMODEL	800	12/30/1999

SALES DATA

OFF RECORD Number	DATE	TYPE INST	Q / U	V / I	RSN CD	SALE PRICE
1754/1419	9/01/2011	WD	Q	I	02	500,000
GRANTOR: GOLDMAN LOUIS E JR &						
GRANTEE: DONGO JULIO TRUSTEE						
0883/0436	5/14/1999	WD	U	I	22	281,000
GRANTOR: GARVIN MARTHA S F/K/A						
GRANTEE: GOLDMAN LOUIS E JR						

BUILDING NOTES

BUILDING DIMENSIONS

BAS=[YR=1993] W9 BAS=[YR=2013] N16 W10 BAS=[YR=2012] W8 S16 BAS=[YR=1994] S10 E17 N10 W17$ E8 N16$ S16 E10$ W1 S10 W17 S16 E27 N26$ PTR= E15 BAS=[YR=2012] E12 S10 W12 N10$ W15$ PTR=N25 CDN=[YR=1995] N12 W17 S12 E17$ S25$.

EXTRA FEATURES

LN	OB/XF CODE	DESCRIPTION	BLD	CAP	L	W	UNITS	UT	Adj R	ADJ UNIT PRICE	ORIG COND	YEAR ON	YEAR ACTUAL	Q	% COND	OB/XF MKT VALUE	NOTES
12	0462	ST/AL FNC	0	0	16	6	96.00	SF	10.00	10.00	100	2005	2005	3	44	422	
13	0402	CONC BUMPE	0	0	0	0	3.00	UT	25.00	25.00	100	2011	2011	3	95	71	
14	0810	CONCRETE A	0	0	0	0	160.00	SF	6.50	6.50	100	2012	2012	3	94	978	
15	1076	TRELLIS A	0	0	8	4	32.00	SF	7.50	7.50	100	2012	2012	3	71	170	
16	1076	TRELLIS A	0	0	10	6	60.00	SF	7.50	7.50	100	2012	2012	3	71	320	
17	0810	CONCRETE A	0	0	0	0	120.00	SF	6.50	6.50	100	2012	2012	3	94	733	

LAND DESCRIPTION

TOTAL OB/XF 2,694

LN	USE CODE	CLS	LAND USE DESCRIPTION	CAP	RD	LOC ZONE	FRONT	DEPTH	TOT LND UTS	UNIT TYPE	DT	DPTH FACT	% COND	TOT ADJ	UNIT PRICE	ADJ UNIT PRICE	LAND VALUE	OTHER ADJUSTMENTS AND NOTES	YEAR	DENSITY	DECL	FRZ	YR	CONSRV

REVIEW DATE 01/07/2022 BY KK Total Acres: 0.00 Total Land Value: 300,000 Market: 0 Agricultural: 0 Common: 300,000 PRINTED 08/02/2023 BY SYS