BLK 260 TRACTS B,C & D OF
LOT 1 'BEING PARCEL 1'
IN OR 2247/445

CVC RE HOLDINGS LLC/
6 SOUTH 14TH STREET
FERNANDINA BEACH, FL 32034

2023

00-00-31-1800-0260-01B0

BUILDING CHARACTERISTICS

ELEMENT	CD	CONSTRUCTION
Exterior Wall	19	COMMON BRK 80
Exterior Wall	10	ABOVE AVG 20
Roof Structur	04	WOOD TRUSS 100
Roof Cover	03	COMP SHNGL 100
Interior Wall	05	DRYWALL 70
Interior Wall	08	DECORATIVE 30
Interior Floo	14	CARPET 70
Interior Floo	13	LVT/LAMNT 30
Ceiling	02	F.NOT SUS 100
Air Condition	03	CENTRAL 100
Heating Type	04	AIR DUCTED 100
Fixtures		9 100
Frame	03	MASONRY 100
Story Height		9 100
RMS		15 100
Stories	1.	1. 100
Units		0 100
BUD8 Adjustme	02	DIST FB 100
Quality	00	QWERTYCCEE 100
Occupancy	04	
DOR CODE	1720	MEDICAL OFFICE
MAP NUM		MKT AREA 01
NEIGHBORHOOD/LOC	1010.00	

AREA TYPE	TOTAL GROSS AREA	PCT OF BASE	TOT ADJ AREA	SUBAREA MARKET VALUE
BAS	5,443	100	5,443	747,433
BAS	306	100	306	42,020
BAS	1,085	100	1,085	148,992
CAN	30	30	9	1,236
CAN	54	30	16	2,197
FCP	357	30	107	14,694
FDU	238	60	143	19,637
TOTALS	7,513		7,109	976,208

MARKET ADJUSTMENTS

TYPE	MDL	EFF. AREA	TOT ADJ PTS	EFF. BASE RATE	REPL. COST NEW	AYB	EYB	ECON	FNCT		NORM	% COND
1721	04	7,109	105.4713	171.65	1,220,260	1957	2000	0	0	0	20.00	80.00

1 MDL OFFICE – 0% - 0 Heated Area: 6834 HX Base Yr

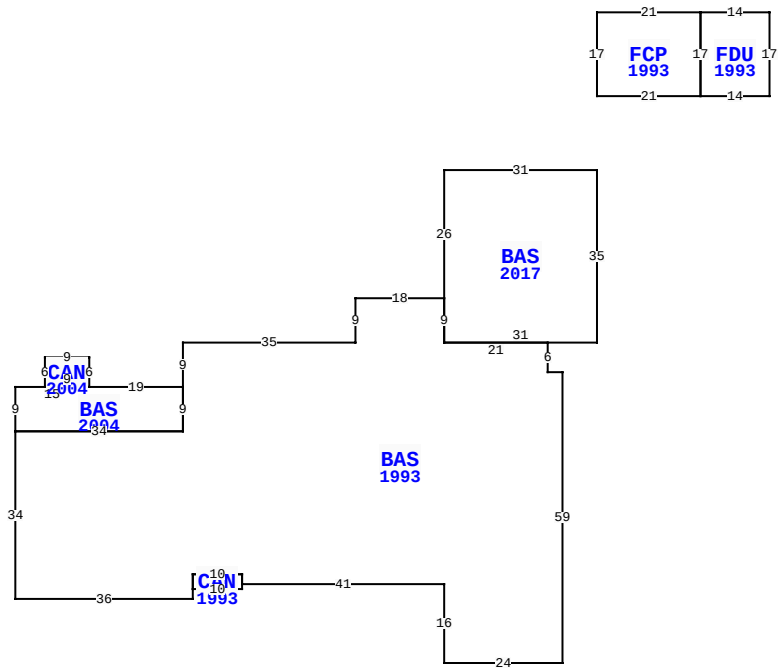

6 S 14TH ST, FERNANDINA BEACH

BLD DATE	02/27/2018 KK	LGL DATE	
XF DATE	02/27/2018 KK	LAND DATE	
INC DATE		AG DATE	

NASSAU COUNTY PROPERTY

PAGE 1 of 2 2

VALUATION SUMMARY

VALUATION BY	STANDARD
Tax Group: 2	Tax Dist:
BUILDING MARKET VALUE	976,208
TOTAL MARKET OB/XF VALUE	32,326
TOTAL LAND VALUE - MARKET	391,593
TOTAL MARKET VALUE	1,400,127
SOH/AGL Deduction	634,765
ASSESSED VALUE	765,362
TOTAL EXEMPTION VALUE	0
BASE TAXABLE VALUE	765,362
TOTAL JUST VALUE	1,400,127
NCON VALUE	0
INCOME VALUE	980,488
PREVIOUS YEAR MKT VALUE	1,126,652

PERMIT NUM	DESCRIPTION	AMT	ISSUED
20163207	ADDITION	132,906	11/21/2016
20140165	REPAIR/RRF	0	01/27/2014
20112842	INSTALL SIGN LIGH	600	10/11/2011
20111670	SIGN	3,350	09/23/2011
20062053	DEMOLITION	0	09/05/2006
20061800	DEMOLITION	0	07/27/2006

SALES DATA

OFF RECORD Number	DATE	TYPE INST	Q U	V I	RSN CD	SALE PRICE
2247/0445	1/01/2019	SW	Q	I	05	1,230,000
GRANTOR: SOUTHEAST MEDICAL & O						
GRANTEE: CVC RE HOLDINGS LLC						
2056/1009	6/30/2016	SW	U	I	30	845,000
GRANTOR: M & S PARTNERSHIP						
GRANTEE: SOUTHEAST MEDICAL &						

BUILDING NOTES

BUILDING DIMENSIONS

BAS=[YR=2017] W31 S26 BAS=[YR=1993] W18 S9 W35 S9
BAS=[YR=2004] W19 CAN=[YR=2004] N6 W9 S6 E9$ W15 S9 E34 N9$
S9 W34 S34 E36 N2 CAN=[YR=1993] E10 N3 W10 S3$ N3 E10 S2 E41
S16 E24 N59 W3 N6 W21 N9$ S9 E31 N35$ PTR= N15 FCP=[YR=1993]
N17 E21 FDU=[YR=1993] E14 S17 W14 N17$ S17 W21$ S15$.

EXTRA FEATURES

LN	OB/XF CODE	DESCRIPTION	BLD	CAP	L	W	UNITS	UT	Adj R	ADJ UNIT PRICE	ORIG COND	YEAR ON	YEAR ACTUAL	Q	% COND	OB/XF MKT VALUE	NOTES
1	0500	FP-PRE FAB	0	0	0	0	1.00	UT	3,500.00	3,500.00	100	1980	1980	3	49	1,715	
2	0845	KOOL DECK	0	0	0	0	485.00	SF	7.25	7.25	100	1980	1980	3	35	1,231	
3	0861	POOL GUNIT	0	0	38	17	646.00	SF	85.00	85.00	100	1980	1980	3	20	10,982	
4	0810	CONCRETE A	0	0	0	0	209.00	SF	6.50	6.50	100	1957	1957	3	20	272	
5	0812	CONCRETE C	0	0	0	0	6,767.00	SF	4.00	4.00	100	1988	1988	3	57	15,429	
7	0962	SKYLIGHT	0	0	0	0	4.00	UT	250.00	250.00	100	2004	2004	3	86	860	
8	0646	LWN SPRK H	0	0	0	0	29.00	UT	2.00	2.00	100	1989	1989	3	20	12	
9	0648	LIGHTS-AV	0	0	0	0	4.00	UT	140.00	140.00	100	1989	1989	3	20	112	
10	1127	BRICK 8"	0	0	0	0	176.00	SF	11.00	11.00	100	1965	1965	3	48.4	937	
11	0421	CL FNC 3'	0	0	0	0	170.00	LF	4.00	4.00	100	1993	1993	3	32	218	

TOTAL OB/XF 31,768

LAND DESCRIPTION

LN	USE CODE	CLS	LAND USE DESCRIPTION	CAP	RD	LOC ZONE	FRONT	DEPTH	TOT LND UTS	UNIT TYPE	DT	DPTH FACT	% COND	TOT ADJ	UNIT PRICE	ADJ UNIT PRICE	LAND VALUE	OTHER ADJUSTMENTS AND NOTES	YEAR	DENSITY	DECL	FRZ	YR	CONSRV
1	001910	C	MEDICAL OF	0	0003	C-1	154.00	172.00	26,106.18	SF		1.00	1.00	1.00	15.00	15.00	391,593							

REVIEW DATE 02/27/2018 BY KK Total Acres: 0.00 Total Land Value: 391,593 Market: 0 Agricultural: 0 Common: 391,593 PRINTED 08/02/2023 BY SYS

BLK 260 TRACTS B,C & D OF
LOT 1 'BEING PARCEL 1'
IN OR 2247/445

CVC RE HOLDINGS LLC/
6 SOUTH 14TH STREET
FERNANDINA BEACH, FL 32034

2023

00-00-31-1800-0260-01B0

NASSAU COUNTY PROPERTY

BUILDING CHARACTERISTICS

ELEMENT	CD	CONSTRUCTION

DOR CODE	1720	MEDICAL OFFICE	
MAP NUM		MKT AREA	01
NEIGHBORHOOD/LOC	1010.00		

AREA TYPE	TOTAL GROSS AREA	PCT OF BASE	TOT ADJ AREA	SUBAREA MARKET VALUE
TOTALS				

MARKET ADJUSTMENTS

TYPE	MDL	EFF. AREA	TOT ADJ PTS	EFF. BASE RATE	REPL. COST NEW	AYB	EYB	ECON	FNCT		NORM	% COND

BLD DATE	02/27/2018	KK	LGL DATE
XF DATE	02/27/2018	KK	LAND DATE
INC DATE			AG DATE

VALUATION SUMMARY

VALUATION BY	STANDARD
Tax Group: 2	Tax Dist:
BUILDING MARKET VALUE	976,208
TOTAL MARKET OB/XF VALUE	32,326
TOTAL LAND VALUE - MARKET	391,593
TOTAL MARKET VALUE	1,400,127
SOH/AGL Deduction	634,765
ASSESSED VALUE	765,362
TOTAL EXEMPTION VALUE	0
BASE TAXABLE VALUE	765,362
TOTAL JUST VALUE	1,400,127
NCON VALUE	0
INCOME VALUE	980,488
PREVIOUS YEAR MKT VALUE	1,126,652

PERMIT NUM	DESCRIPTION	AMT	ISSUED
20042251	H/AC	8,000	12/02/2004
20041669	ELEC OTHER	3,000	09/16/2004
20041670	OTHER	1,000	09/16/2004
20041384	ADDITION	150,000	07/29/2004
20021123	REMODEL	1,000	07/02/2002
5254	SIGN	1,975	03/02/1989

SALES DATA

OFF RECORD Number	DATE	TYPE INST	Q U /	V I /	RSN CD	SALE PRICE
2247/0445	1/01/2019	SW	Q	I	05	1,230,000
GRANTOR: SOUTHEAST MEDICAL & O						
GRANTEE: CVC RE HOLDINGS LLC						
2056/1009	6/30/2016	SW	U	I	30	845,000
GRANTOR: M & S PARTNERSHIP						
GRANTEE: SOUTHEAST MEDICAL &						

BUILDING NOTES

BUILDING DIMENSIONS

EXTRA FEATURES

LN	OB/XF CODE	DESCRIPTION	BLD	CAP	L	W	UNITS	UT	Adj R	ADJ UNIT PRICE	ORIG COND	YEAR ON	YEAR ACTUAL	Q	% COND	OB/XF MKT VALUE	NOTES
12	0464	FNC GT 10'	0	0	0	0	1.00	UT	350.00	350.00	100	1993	1993	3	32	112	
13	0351	CARPORT MT	0	0	20	11	220.00	SF	5.60	5.60	100	2000	2000	3	20	246	
14	0402	CONC BUMPE	0	0	0	0	9.00	UT	25.00	25.00	100	2004	2004	3	89	200	

LAND DESCRIPTION

TOTAL OB/XF 558

LN	USE CODE	CLS	LAND USE DESCRIPTION	CAP	RD	LOC ZONE	FRONT	DEPTH	TOT LND UTS	UNIT TYPE	DT	DPTH FACT	% COND	TOT ADJ	UNIT PRICE	ADJ UNIT PRICE	LAND VALUE	OTHER ADJUSTMENTS AND NOTES	YEAR	DENSITY	DECL	FRZ	YR	CONSRV

REVIEW DATE 02/27/2018 BY KK Total Acres: 0.00 Total Land Value: 391,593 Market: 0 Agricultural: 0 Common: 391,593 PRINTED 08/02/2023 BY SYS