BLOCK 259 E100 FT OF S150 FT
OF LOT 1
IN OR 2494/550

WILSON DOUGLAS W & DONNA M
1425 ATLANTIC AVE
FERNANDINA BEACH, FL 32034

2023

00-00-31-1800-0259-0011

NASSAU COUNTY PROPERTY

BUILDING CHARACTERISTICS

ELEMENT	CD	CONSTRUCTION
Exterior Wall	17	CB STUCCO 100
Roof Structur	03	GABLE/HIP 100
Roof Cover	03	COMP SHNGL 100
Interior Wall	05	DRYWALL 100
Interior Floo	14	CARPET 80
Interior Floo	11	CLAY TILE 20
Air Condition	03	CENTRAL 100
Heating Type	04	AIR DUCTED 100
Bedrooms		3 100
Bathrooms		2 100
Frame	03	MASONRY 100
Stories	1.	1. 100
Units		0 100
BUD8 Adjustme	02	DIST FB 100
Occupancy	00	NONE 100
Quality	03	Quality Level 03
DOR CODE	0100	SINGLE FAMILY
MAP NUM		MKT AREA 01
NEIGHBORHOOD/LOC	1012.00	

AREA TYPE	TOTAL GROSS AREA	PCT OF BASE	TOT ADJ AREA	SUBAREA MARKET VALUE
BAS	750	100	750	70,313
BAS	1,921	100	1,921	180,095
FEP	164	80	131	12,281
FOP	32	30	10	938
STP	32	10	3	281
UGR	690	45	310	29,063
UOP	35	20	7	656
TOTALS	3,624		3,132	293,626

MARKET ADJUSTMENTS

TYPE	MDL	EFF. AREA	TOT ADJ PTS	EFF. BASE RATE	REPL. COST NEW	AYB	EYB	ECON	FNCT		NORM	% COND
0900	01	3,132	98.0720	116.46	364,753	1949	1983	0	0	0	19.50	80.50

1 SNGL FAM – 0% - 2023 Heated Area: 2671 HX Base Yr

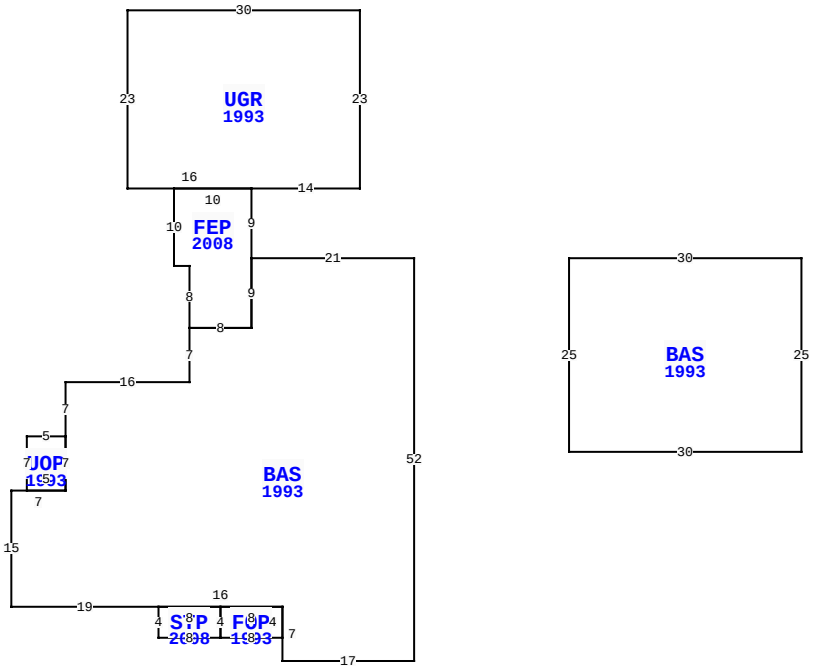

1425 ATLANTIC AV, FERNANDINA BEACH

BLD DATE	08/01/2014 KK	LGL DATE	
XF DATE		LAND DATE	
INC DATE		AG DATE	

VALUATION SUMMARY

VALUATION BY	STANDARD
Tax Group: 2	Tax Dist:
BUILDING MARKET VALUE	293,626
TOTAL MARKET OB/XF VALUE	9,046
TOTAL LAND VALUE - MARKET	276,000
TOTAL MARKET VALUE	578,672
SOH/AGL Deduction	0
ASSESSED VALUE	578,672
TOTAL EXEMPTION VALUE	0
BASE TAXABLE VALUE	578,672
TOTAL JUST VALUE	578,672
NCON VALUE	0
INCOME VALUE	
PREVIOUS YEAR MKT VALUE	539,382

PERMIT NUM	DESCRIPTION	AMT	ISSUED
20090563	OTHER	1,150	05/06/2009
20070902	REPAIR/RRF	16,900	05/23/2007
6483	REPAIR/RRF	1,450	04/15/1991

SALES DATA

OFF RECORD Number	DATE	TYPE INST	Q / U	V / I	RSN CD	SALE PRICE
2539/1100	2/16/2022	WD	Q	I	01	702,000
GRANTOR: JONES MARVIN E JR,JAC						
GRANTEE: WILSON DOUGLAS W &						
2494/0550	9/01/2021	FJ	U	I	11	0
GRANTOR: JONES MARY EST						
GRANTEE: JONES MARVIN E JR &						

BUILDING NOTES

BUILDING DIMENSIONS

BAS=[YR=1993] W21 FEP=[YR=2008] N9 UGR=[YR=1993] E14 N23 W30 S23 E16$ W10 S10 E2 S8 E8 N9$ S9 W8 S7 W16 S7 UOP=[YR=1993] W5 S7 E5 N7$ S7 W7 S15 E19 STP=[YR=2008] S4 E8 FOP=[YR=1993] E8 N4 W8 S4$ N4 W8$ E16 S7 E17 N52$ PTR=E20 BAS=[YR=1993] E30 S25 W30 N25$ W20$.

EXTRA FEATURES

LN	OB/XF CODE	DESCRIPTION	BLD	CAP	L	W	UNITS	UT	Adj R	ADJ UNIT PRICE	ORIG COND	YEAR ON	YEAR ACTUAL	Q	% COND	OB/XF MKT VALUE	NOTES
1	0940	SHEDS/PORT	0	0	0	0	120.00	SF	30.00	30.00	100	1980	1980	3	20	720	
2	0500	FP-PRE FAB	0	0	0	0	1.00	UT	3,500.00	3,500.00	100	1949	1949	3	20	700	
3	0810	CONCRETE A	0	0	0	0	800.00	SF	6.50	6.50	100	1960	1960	3	20	1,040	
4	0351	CARPORT MT	0	0	20	23	460.00	SF	10.00	10.00	100	1993	1993	3	20	920	
5	0812	CONCRETE C	0	0	0	0	2,083.00	SF	4.00	4.00	100	1993	1993	3	68	5,666	

LAND DESCRIPTION

TOTAL OB/XF 9,046

LN	USE CODE	CLS	LAND USE DESCRIPTION	CAP	RD	LOC ZONE	FRONT	DEPTH	TOT LND UTS	UNIT TYPE	DT	DPTH FACT	% COND	TOT ADJ	UNIT PRICE	ADJ UNIT PRICE	LAND VALUE	OTHER ADJUSTMENTS AND NOTES	YEAR	DENSITY	DECL	FRZ	YR	CONSRV
1	000100	C	SFR	0	0003	CPO	100.00	150.00	100.00	FF	1	1.15	1.00	1.15	2,400.00	2,760.00	276,000							

REVIEW DATE 08/27/2019 BY DJA Total Acres: 0.00 Total Land Value: 276,000 Market: 0 Agricultural: 0 Common: 276,000 PRINTED 08/02/2023 BY SYS