BLOCK 256 LOT 1
IN OR 1977/1001
CITY OF FDNA BEACH

AMELIA ISLAND LLC
960194 GATEWAY BLVD STE 101
FERNANDINA BEACH, FL 32034

2023

00-00-31-1800-0256-0010

NASSAU COUNTY PROPERTY

BUILDING CHARACTERISTICS

ELEMENT	CD	CONSTRUCTION
Exterior Wall	07	ASB SHNGLE 70
Exterior Wall	05	AVERAGE 30
Roof Structur	03	GABLE/HIP 100
Roof Cover	03	COMP SHNGL 100
Interior Wall	04	PLYWOOD 100
Interior Floo	08	SHT VINYL 50
Interior Floo	14	CARPET 50
Air Condition	03	CENTRAL 100
Heating Type	04	AIR DUCTED 100
Bedrooms		2 100
Bathrooms		2 100
Frame	02	WOOD FRAME 100
Stories	1.	1. 100
Units		0 100
BUD8 Adjustme	02	DIST FB 100
Occupancy	OO	OWNER OCC 100
Quality	03	Quality Level 03
DOR CODE	1200	STORE/OFFICE/RESID
MAP NUM		MKT AREA 01
NEIGHBORHOOD/LOC	1010.00	

AREA TYPE	TOTAL GROSS AREA	PCT OF BASE	TOT ADJ AREA	SUBAREA MARKET VALUE
BAS	880	100	880	62,104
BAS	40	100	40	2,823
FSP	352	40	141	9,950
STR	45	10	4	282
UOP	40	20	8	565
UST	880	45	396	27,947
UST	320	45	144	10,163
TOTALS	2,557		1,613	113,834

MARKET ADJUSTMENTS

TYPE	MDL	EFF. AREA	TOT ADJ PTS	EFF. BASE RATE	REPL. COST NEW	AYB	EYB	ECON	FNCT		NORM	% COND
0100	01	1,613	104.6520	94.45	152,348	1925	1980	0	0	0	25.28	74.72

1 SINGLE FAM – 0% - 0 Heated Area: 920 HX Base Yr

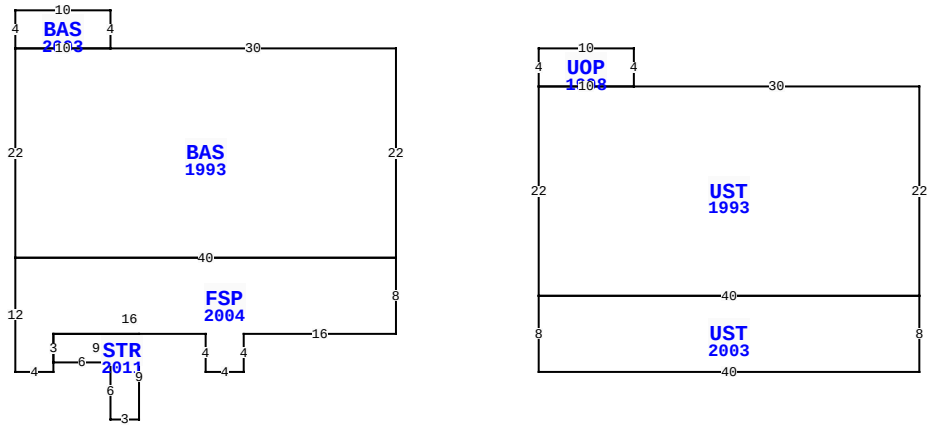

604 N 14TH ST, FERNANDINA BEACH

BLD DATE	05/22/2020 KK	LGL DATE	
XF DATE	05/22/2020 KK	LAND DATE	05/22/2020 KK
INC DATE		AG DATE	

VALUATION SUMMARY

VALUATION BY	STANDARD
Tax Group: 2	Tax Dist:
BUILDING MARKET VALUE	228,482
TOTAL MARKET OB/XF VALUE	18,671
TOTAL LAND VALUE - MARKET	98,905
TOTAL MARKET VALUE	346,058
SOH/AGL Deduction	67,965
ASSESSED VALUE	278,093
TOTAL EXEMPTION VALUE	0
BASE TAXABLE VALUE	278,093
TOTAL JUST VALUE	346,058
NCON VALUE	0
INCOME VALUE	
PREVIOUS YEAR MKT VALUE	277,006

PERMIT NUM	DESCRIPTION	AMT	ISSUED
20190114	REPAIR/RRF - SIDI	5,000	01/16/2020
20110509	REPAIR/RRF	300	04/08/2011
20052067	NEW CONSTR	150,000	06/24/2005
20051615	ELEC OTHER	4,000	04/18/2005
20051618	FOUNDATION	50	04/18/2005
20051602	OTHER	3,000	04/15/2005

SALES DATA

OFF RECORD Number	DATE	TYPE INST	Q / U	V / I	RSN CD	SALE PRICE
1977/1001	4/30/2015	WD	Q	I	01	240,000
GRANTOR: WEILBACHER KARL ALFRE						
GRANTEE: AMELIA ISLAND LLC						
0917/1706	2/02/2000	WD	U	V	06	100
GRANTOR: WALKER ROBERT TYSON &						
GRANTEE: WEILBACHER KARL A J						

BUILDING NOTES

BUILDING DIMENSIONS

BAS=[YR=1993] W30 BAS=[YR=2003] N4 W10 S4 E10 $ W10 S22 FSP=[YR=2004] S12 E4 N1 STR=[YR=2011] E6 S6 E3 N9 W9 S3$ N3 E16 S4 E4 N4 E16 N8 W40 $ E40 N22$ PTR= E15 UOP=[YR=1998] E10 S4 UST=[YR=1993] E30 S22 UST=[YR=2003] S8 W40 N8 E40$ W40 N22 E10$ W10 N4$ W15$.

EXTRA FEATURES

LN	OB/XF CODE	DESCRIPTION	BLD	CAP	L	W	UNITS	UT	Adj R	ADJ UNIT PRICE	ORIG COND	YEAR ON	YEAR ACTUAL	Q	% COND	OB/XF MKT VALUE	NOTES
3	0803	ASPHALT C	0	0	0	0	3,662.00	SF	2.00	2.00	100	1990	1990	3	50	3,662	
5	0402	CONC BUMPE	0	0	0	0	12.00	UT	25.00	25.00	100	1996	1996	3	80	240	
7	0940	SHEDS/PORT	0	0	20	12	240.00	SF	19.50	19.50	100	1996	1996	3	20	936	
8	0810	CONCRETE A	0	0	48	3	144.00	SF	6.50	6.50	100	1996	1996	3	73	683	
9	0443	STK FNC 6'	0	0	0	0	521.00	LF	10.00	10.00	100	1997	1997	3	20	1,042	
10	0463	FENCE GATE	0	0	0	0	6.00	UT	300.00	300.00	100	1997	1997	3	45	810	
11	0510	GARAGE WD-	0	0	40	18	720.00	SF	35.00	35.00	100	2003	2003	3	36	9,072	
14	1242	WD DECK A	0	0	0	0	718.00	SF	10.00	10.00	100	2006	2006	3	31	2,226	

LAND DESCRIPTION

TOTAL OB/XF 18,671

LN	USE CODE	CLS	LAND USE DESCRIPTION	CAP	RD	LOC ZONE	FRONT	DEPTH	TOT LND UTS	UNIT TYPE	DT	DPTH FACT	% COND	TOT ADJ	UNIT PRICE	ADJ UNIT PRICE	LAND VALUE	OTHER ADJUSTMENTS AND NOTES	YEAR	DENSITY	DECL	FRZ	YR	CONSRV
1	001200	C	STORE COMB	0	0006	C-1	172.00	230.00	39,562.00	SF		1.00	1.00	1.00	2.50	2.50	98,905							

REVIEW DATE 05/22/2020 BY KK Total Acres: 0.00 Total Land Value: 98,905 Market: 0 Agricultural: 0 Common: 98,905 PRINTED 08/02/2023 BY SYS

BLOCK 256 LOT 1
IN OR 1977/1001
CITY OF FDNA BEACH

AMELIA ISLAND LLC
960194 GATEWAY BLVD STE 101
FERNANDINA BEACH, FL 32034

2023

00-00-31-1800-0256-0010

NASSAU COUNTY PROPERTY

BUILDING CHARACTERISTICS

ELEMENT	CD	CONSTRUCTION
Exterior Wall	05	AVERAGE 100
Roof Structur	04	WOOD TRUSS 100
Roof Cover	03	COMP SHNGL 100
Interior Wall	05	DRYWALL 100
Interior Floo	03	CONC FINSH 60
Interior Floo	11	CLAY TILE 40
Ceiling	02	F.NOT SUS 100
Air Condition	03	CENTRAL 100
Heating Type	04	AIR DUCTED 100
Fixtures		17 100
Frame	02	WOOD FRAME 100
Common Wall		10 100
Story Height		8 100
RMS		11 100
Stories	1.	1. 100
Units		0 100
BUD8 Adjustme	02	DIST FB 100
Occupancy	00	NONE 100
Quality	02	Quality Level 02

DOR CODE	1200	STORE/OFFICE/RESID	
MAP NUM		MKT AREA	01
NEIGHBORHOOD/LOC	1010.00		

AREA TYPE	TOTAL GROSS AREA	PCT OF BASE	TOT ADJ AREA	SUBAREA MARKET VALUE
APT	660	100	660	15,146
BAS	1,050	100	1,050	24,095
BAS	2,800	100	2,800	64,254
CAN	132	30	40	918
CAN	140	30	42	964
FST	88	50	44	1,010
SFB	450	80	360	8,261
TOTALS	5,320		4,996	114,648

MARKET ADJUSTMENTS

TYPE	MDL	EFF. AREA	TOT ADJ PTS	EFF. BASE RATE	REPL. COST NEW	AYB	EYB	ECON	FNCT		NORM	% COND
1101	04	4,996	78.3238	114.74	573,241	1925	1980	0	30	0	50.00	20.00

2 RETAILSTOR – 0% - 0 Heated Area: 4870 HX Base Yr

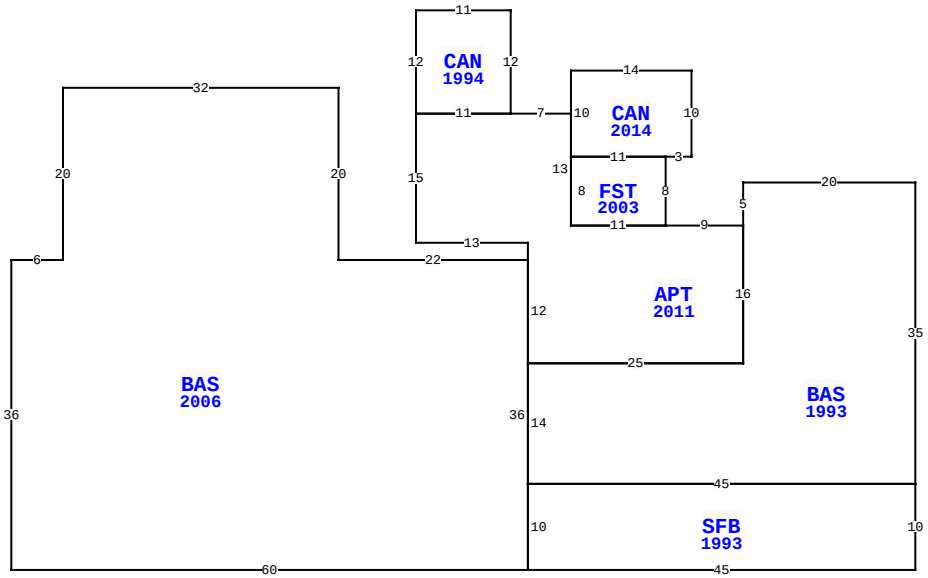

604 N 14TH ST, FERNANDINA BEACH

BLD DATE	05/22/2020	KK	LGL DATE	
XF DATE	05/22/2020	KK	LAND DATE	05/22/2020 KK
INC DATE			AG DATE	

NASSAU COUNTY PROPERTY — VALUATION SUMMARY

VALUATION BY	STANDARD
Tax Group: 2	Tax Dist:
BUILDING MARKET VALUE	228,482
TOTAL MARKET OB/XF VALUE	18,671
TOTAL LAND VALUE - MARKET	98,905
TOTAL MARKET VALUE	346,058
SOH/AGL Deduction	67,965
ASSESSED VALUE	278,093
TOTAL EXEMPTION VALUE	0
BASE TAXABLE VALUE	278,093
TOTAL JUST VALUE	346,058
NCON VALUE	0
INCOME VALUE	
PREVIOUS YEAR MKT VALUE	277,006

PERMIT NUM	DESCRIPTION	AMT	ISSUED
20040602	REMODEL	1,000	03/26/2004
20040602	NEW CONSTR	1,000	03/26/2004
20032334	REMODEL	2,000	01/13/2003
20012390	REMODEL	6,000	02/08/2002
20020145	OTHER	1,000	01/30/2002
20020001	REPAIR/RRF	1,000	01/08/2002

SALES DATA

OFF RECORD Number	DATE	TYPE INST	Q U	V I	RSN CD	SALE PRICE
1977/1001	4/30/2015	WD	Q	I	01	240,000
GRANTOR: WEILBACHER KARL ALFRE						
GRANTEE: AMELIA ISLAND LLC						
0917/1706	2/02/2000	WD	U	V	06	100
GRANTOR: WALKER ROBERT TYSON &						
GRANTEE: WEILBACHER KARL A J						

BUILDING NOTES

BUILDING DIMENSIONS

BAS=[YR=1993] W20 S5 APT=[YR=2011] W9 FST=[YR=2003] N8
CAN=[YR=2014] E3 N10 W14 S10 E11$ W11 S8 E11$ W11 N13 W7
CAN=[YR=1994] N12 W11 S12 E11$ W11 S15 E13 S2 BAS=[YR=2006]
W22 N20 W32 S20 W6 S36 E60 SFB=[YR=1993] E45 N10 W45 S10$
N36$ S12 E25 N16$ S16 W25 S14 E45 N35$.

EXTRA FEATURES

L N	OB/XF CODE	DESCRIPTION	BLD	CAP	L	W	UNITS	UT	Adj R	ADJ UNIT PRICE	ORIG COND	YEAR ON	YEAR ACTUAL	Q	% COND	OB/XF MKT VALUE	NOTES

LAND DESCRIPTION

TOTAL OB/XF 0

L N	USE CODE	CLS	LAND USE DESCRIPTION	CAP	R D	LOC ZONE	FRONT	DEPTH	TOT LND UTS	UNIT TYPE	D T	DPTH FACT	% COND	TOT ADJ	UNIT PRICE	ADJ UNIT PRICE	LAND VALUE	OTHER ADJUSTMENTS AND NOTES	YEAR	DENSITY	DECL	FRZ	YR	CONSRV

REVIEW DATE 05/22/2020 BY KK Total Acres: 0.00 Total Land Value: 98,905 Market: 0 Agricultural: 0 Common: 98,905 PRINTED 08/02/2023 BY SYS