BLK 244 LOT 1
IN OR 1704/407
CITY OF FDNA BEACH S/D OF

HEARD LEASING LLC
P O BOX 693
FERNANDINA BEACH, FL 32035-0693

2023

00-00-31-1800-0244-0010

BUILDING CHARACTERISTICS

ELEMENT	CD	CONSTRUCTION
Exterior Wall	12	CEDAR 100
Roof Structur	04	WOOD TRUSS 100
Roof Cover	03	COMP SHNGL 100
Interior Wall	05	DRYWALL 100
Interior Floo	14	CARPET 100
Ceiling	02	F.NOT SUS 100
Air Condition	03	CENTRAL 100
Heating Type	04	AIR DUCTED 100
Fixtures		18 100
Frame	02	WOOD FRAME 100
Common Wall		7 100
Story Height		12 100
RMS		11 100
Stories	2.	2. 100
Units		0 100
BUD8 Adjustme	02	DIST FB 100
Occupancy	00	NONE 100
Quality	04	Quality Level 04
DOR CODE	7600	MORTUARY/CEMETERY
MAP NUM		MKT AREA 01
NEIGHBORHOOD/LOC	1005.00	

AREA TYPE	TOTAL GROSS AREA	PCT OF BASE	TOT ADJ AREA	SUBAREA MARKET VALUE
BAS	3,758	100	3,758	374,398
BAS	70	100	70	6,974
CAN	483	30	145	14,446
FOP	104	30	31	3,088
FOP	511	30	153	15,243
FUS	3,108	100	3,108	309,641
UOP	581	20	116	11,557
TOTALS	8,615		7,381	735,346

MARKET ADJUSTMENTS

TYPE	MDL	EFF. AREA	TOT ADJ PTS	EFF. BASE RATE	REPL. COST NEW	AYB	EYB	ECON	FNCT		NORM	% COND
7601	04	7,381	101.0900	126.11	930,818	1900	1980	0	0	0	21.00	79.00

1 MORTUARY - 0% - 0 Heated Area: 6936 HX Base Yr

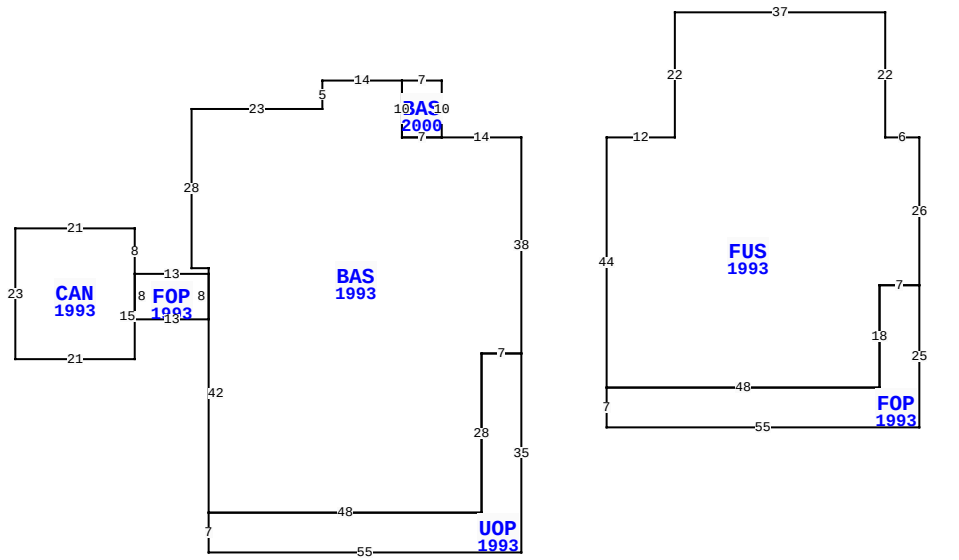

1305 ATLANTIC AV, FERNANDINA BEACH

BLD DATE	09/29/2021	KK	LGL DATE	
XF DATE	09/29/2021	KK	LAND DATE	09/29/2021 KK
INC DATE			AG DATE	

NASSAU COUNTY PROPERTY

PAGE 1 of 4 2

VALUATION SUMMARY

VALUATION BY	STANDARD
Tax Group: 2	Tax Dist:
BUILDING MARKET VALUE	1,242,669
TOTAL MARKET OB/XF VALUE	24,478
TOTAL LAND VALUE - MARKET	207,694
TOTAL MARKET VALUE	1,474,841
SOH/AGL Deduction	441,687
ASSESSED VALUE	1,033,154
TOTAL EXEMPTION VALUE	0
BASE TAXABLE VALUE	1,033,154
TOTAL JUST VALUE	1,474,841
NCON VALUE	0
INCOME VALUE	
PREVIOUS YEAR MKT VALUE	1,297,494

PERMIT NUM	DESCRIPTION	AMT	ISSUED
20211075	REPAIR-FRONT PORC	6,000	03/31/2021
20141310	H/AC	3,590	06/17/2014
20130464	H/AC	4,601	03/07/2013
20070479	REPAIR/RRF	6,800	03/22/2007
20060237	REMODEL	2,000	01/27/2006
20042037	REPAIR/RRF	2,000	11/02/2004

SALES DATA

OFF RECORD Number	DATE	TYPE INST	Q / U	V / I	RSN CD	SALE PRICE
1704/0407	10/08/2010	WD	U	I	30	100
GRANTOR: HEARD JOHN H						
GRANTEE: HEARD LEASING LLC						
0441/0203	12/01/1984	FS	U	I		100
GRANTOR:						
GRANTEE:						

BUILDING NOTES

BUILDING DIMENSIONS

BAS=[YR=1993] W14 BAS=[YR=2000] N10 W7 S10 E7 $ W7N10 W14 S5 W23 S28E3 S1 FOP=[YR=1993] W13 CAN=[YR=1993] N8 W21 S23 E21 N15 $ S8 E13 N8 $ S42 UOP=[YR=1993] S7 E55 N35 W7 S28 W48 $ E48 N28 E7 N38 $ PTR= E15 FUS=[YR=1993] E12 N22 E37 S22 E6S26 FOP=[YR=1993] S25 W55 N7 E48 N18E7 $ W7 S18 W48 N44 $ W15 $.

EXTRA FEATURES

LN	OB/XF CODE	DESCRIPTION	BLD	CAP	L	W	UNITS	UT	Adj R	ADJ UNIT PRICE	ORIG COND	YEAR ON	YEAR ACTUAL	Q	% COND	OB/XF MKT VALUE	NOTES
1	0803	ASPHALT C	0	0	0	0	13,709.00	SF	2.00	2.00	100	1997	1997	3	50	13,709	
2	0504	FP-ELECTRI	0	0	0	0	1.00	UT	2,000.00	2,000.00	100	1970	1970	3	31.2	624	
3	0504	FP-ELECTRI	0	0	0	0	2.00	UT	2,000.00	2,000.00	100	1970	1970	3	31.2	1,248	
4	0810	CONCRETE A	0	0	0	0	492.00	SF	6.50	6.50	100	1969	1969	3	21	672	
5	0810	CONCRETE A	0	0	0	0	255.00	SF	6.50	6.50	100	1991	1991	3	64	1,061	
6	0402	CONC BUMPE	0	0	0	0	13.00	UT	25.00	25.00	100	1997	1997	3	81	263	
7	0441	STK FNC 4'	0	0	0	0	42.00	LF	6.50	6.50	100	1991	1991	3	20	55	
9	0646	LWN SPRK H	0	0	0	0	20.00	UT	2.00	2.00	100	2000	2000	3	27	11	
10	0648	LIGHTS-AV	0	0	0	0	13.00	UT	140.00	140.00	100	1993	1993	3	20	364	
11	0825	BRICK	0	0	31	3	93.00	SF	12.50	12.50	100	1993	1993	3	90	1,046	

TOTAL OB/XF 19,053

LAND DESCRIPTION

LN	USE CODE	CLS	LAND USE DESCRIPTION	CAP	RD	LOC ZONE	FRONT	DEPTH	TOT LND UTS	UNIT TYPE	DT	DPTH FACT	% COND	TOT ADJ	UNIT PRICE	ADJ UNIT PRICE	LAND VALUE	OTHER ADJUSTMENTS AND NOTES	YEAR	DENSITY	DECL	FRZ	YR	CONSRV
1	007600	C	MORTUARY	0	0003	CPO	230.00	172.00	39,560.74	SF		1.00	1.00	1.00	5.25	5.25	207,694							

REVIEW DATE 09/29/2021 BY KK Total Acres: 0.00 Total Land Value: 207,694 Market: 0 Agricultural: 0 Common: 207,694 PRINTED 08/02/2023 BY SYS

BLK 244 LOT 1
IN OR 1704/407
CITY OF FDNA BEACH S/D OF

HEARD LEASING LLC
P O BOX 693
FERNANDINA BEACH, FL 32035-0693

2023

00-00-31-1800-0244-0010

BUILDING CHARACTERISTICS

ELEMENT	CD	CONSTRUCTION
Exterior Wall	12	CEDAR 100
Roof Structur	04	WOOD TRUSS 100
Roof Cover	12	MODULAR MT 100
Interior Wall	05	DRYWALL 100
Interior Floo	14	CARPET 100
Ceiling	02	F.NOT SUS 100
Air Condition	03	CENTRAL 100
Heating Type	03	FORCED AIR 100
Fixtures		2 100
Frame	02	WOOD FRAME 100
Common Wall		9 100
Story Height		10 100
RMS		2 100
Stories	1.	1. 100
Units		0 100
BUD8 Adjustme	02	DIST FB 100
Occupancy	00	NONE 100
Quality	04	Quality Level 04

DOR CODE	7600	MORTUARY/CEMETERY	
MAP NUM		MKT AREA	01
NEIGHBORHOOD/LOC	1005.00		

AREA TYPE	TOTAL GROSS AREA	PCT OF BASE	TOT ADJ AREA	SUBAREA MARKET VALUE
BAS	504	100	504	25,643
TOTALS	504		504	25,643

MARKET ADJUSTMENTS

TYPE	MDL	EFF. AREA	TOT ADJ PTS	EFF. BASE RATE	REPL. COST NEW	AYB	EYB	ECON	FNCT		NORM	% COND
1701	04	504	102.3734	145.37	73,266	1900	1980	0	0	0	65.00	35.00

2 OFFICE 1&2 – 0% - 0 Heated Area: 504 HX Base Yr

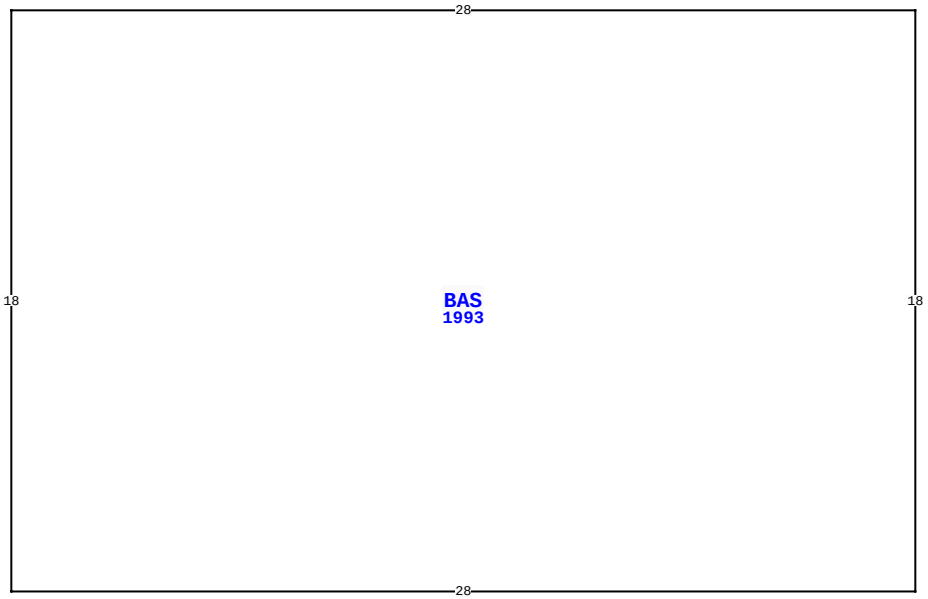

1305 ATLANTIC AV, FERNANDINA BEACH

BLD DATE	09/29/2021	KK	LGL DATE	
XF DATE	09/29/2021	KK	LAND DATE	09/29/2021 KK
INC DATE			AG DATE	

NASSAU COUNTY PROPERTY

PAGE 2 of 4 2

VALUATION SUMMARY

VALUATION BY	STANDARD
Tax Group: 2	Tax Dist:
BUILDING MARKET VALUE	1,242,669
TOTAL MARKET OB/XF VALUE	24,478
TOTAL LAND VALUE - MARKET	207,694
TOTAL MARKET VALUE	1,474,841
SOH/AGL Deduction	441,687
ASSESSED VALUE	1,033,154
TOTAL EXEMPTION VALUE	0
BASE TAXABLE VALUE	1,033,154
TOTAL JUST VALUE	1,474,841
NCON VALUE	0
INCOME VALUE	
PREVIOUS YEAR MKT VALUE	1,297,494

PERMIT NUM	DESCRIPTION	AMT	ISSUED
20041972	REPAIR/RRF	3,000	10/26/2004
20033795	REPAIR/RRF	12,000	09/09/2003
20032674	H/AC	3,000	03/12/2003
20021121	H/AC	3,000	07/02/2002
20020283	H/AC	3,000	02/20/2002
2003319	ADDITION	11,000	06/22/2000

SALES DATA

OFF RECORD Number	DATE	TYPE INST	Q / U	V / I	RSN CD	SALE PRICE
1704/0407	10/08/2010	WD	U	I	30	100
GRANTOR: HEARD JOHN H						
GRANTEE: HEARD LEASING LLC						
0441/0203	12/01/1984	FS	U	I		100
GRANTOR:						
GRANTEE:						

BUILDING NOTES

BUILDING DIMENSIONS

BAS=[YR=1993] W28 S18 E28 N18 $.

EXTRA FEATURES

LN	OB/XF CODE	DESCRIPTION	BLD	CAP	L	W	UNITS	UT	Adj R	ADJ UNIT PRICE	ORIG COND	YEAR ON	YEAR ACTUAL	Q	% COND	OB/XF MKT VALUE	NOTES
12	1241	WD DECK G	0	0	18	5	90.00	UT	11.50	11.50	100	1993	1993	3	20	207	
13	0097	AWNING CN	0	0	0	0	16.00	SF	65.00	65.00	100	1993	1993	3	40	416	
14	1241	WD DECK G	0	0	6	10	60.00	UT	11.50	11.50	100	1993	1993	3	20	138	
15	1241	WD DECK G	0	0	4	19	76.00	UT	11.50	11.50	100	1993	1993	3	20	175	
16	0097	AWNING CN	0	0	0	0	5.00	SF	65.00	65.00	100	1993	1993	3	40	130	
17	1241	WD DECK G	0	0	0	0	255.00	UT	11.50	11.50	100	1993	1993	3	20	587	
18	0097	AWNING CN	0	0	0	0	15.00	SF	65.00	65.00	100	1993	1993	3	40	390	
19	1241	WD DECK G	0	0	5	3	15.00	UT	11.50	11.50	100	1993	1993	3	20	35	
20	1241	WD DECK G	0	0	6	9	54.00	UT	11.50	11.50	100	1993	1993	3	20	124	
21	1241	WD DECK G	0	0	4	8	32.00	UT	11.50	11.50	100	1993	1993	3	20	74	

TOTAL OB/XF 2,276

LAND DESCRIPTION

LN	USE CODE	CLS	LAND USE DESCRIPTION	CAP	RD	LOC ZONE	FRONT	DEPTH	TOT LND UTS	UNIT TYPE	DT	DPTH FACT	% COND	TOT ADJ	UNIT PRICE	ADJ UNIT PRICE	LAND VALUE	OTHER ADJUSTMENTS AND NOTES	YEAR	DENSITY	DECL	FRZ	YR	CONSRV

REVIEW DATE 09/29/2021 BY KK Total Acres: 0.00 Total Land Value: 207,694 Market: 0 Agricultural: 0 Common: 207,694 PRINTED 08/02/2023 BY SYS

BLK 244 LOT 1
IN OR 1704/407
CITY OF FDNA BEACH S/D OF

HEARD LEASING LLC
P O BOX 693
FERNANDINA BEACH, FL 32035-0693

2023

00-00-31-1800-0244-0010

BUILDING CHARACTERISTICS

ELEMENT	CD	CONSTRUCTION
Exterior Wall	12	CEDAR 100
Roof Structur	04	WOOD TRUSS 100
Roof Cover	03	COMP SHNGL 100
Interior Wall	05	DRYWALL 100
Interior Floo	14	CARPET 100
Ceiling	02	F.NOT SUS 100
Air Condition	03	CENTRAL 100
Heating Type	04	AIR DUCTED 100
Fixtures		4 100
Frame	02	WOOD FRAME 100
Common Wall		13 100
Story Height		12 100
RMS		4 100
Stories	1.	1. 100
Units		0 100
Occupancy	00	NONE 100
Quality	04	Quality Level 04
DOR CODE	7600	MORTUARY/CEMETERY
MAP NUM		MKT AREA 01
NEIGHBORHOOD/LOC	1005.00	

AREA TYPE	TOTAL GROSS AREA	PCT OF BASE	TOT ADJ AREA	SUBAREA MARKET VALUE
BAS	3,231	100	3,231	332,265
FGR	872	60	523	53,783
FOP	36	30	11	1,131
FOP	184	30	55	5,656
FOP	265	30	80	8,227
UOP	150	20	30	3,085
UST	679	40	272	27,971
TOTALS	5,417		4,202	432,119

MARKET ADJUSTMENTS

TYPE	MDL	EFF. AREA	TOT ADJ PTS	EFF. BASE RATE	REPL. COST NEW	AYB	EYB	ECON	FNCT		NORM	% COND
7601	04	4,202	97.5513	121.70	511,383	1991	1991	0	0	0	15.50	84.50

3 MORTUARY - 0% - 0 Heated Area: 3231 HX Base Yr

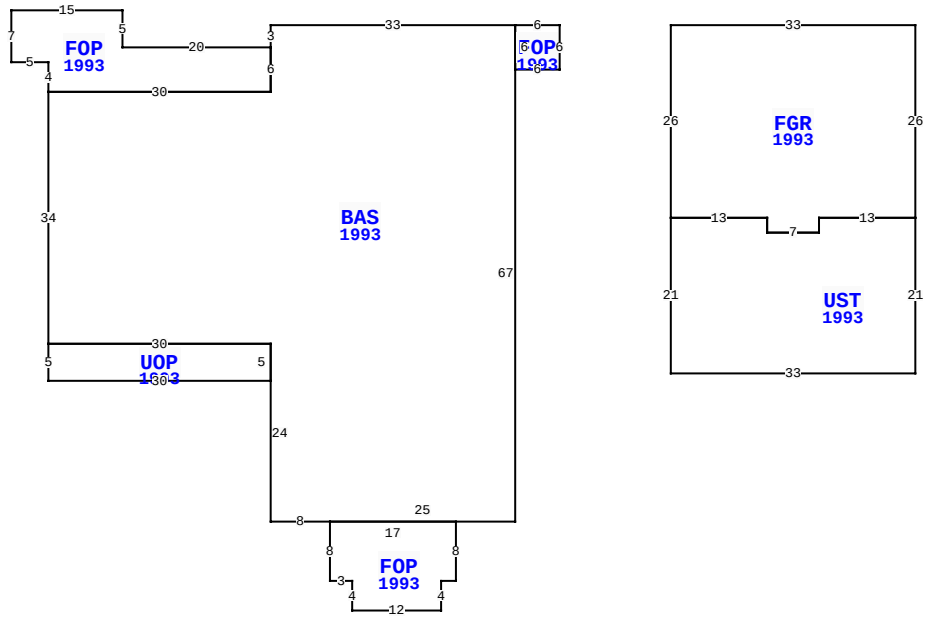

1305 ATLANTIC AV, FERNANDINA BEACH

BLD DATE	09/29/2021	KK	LGL DATE	
XF DATE	09/29/2021	KK	LAND DATE	09/29/2021 KK
INC DATE			AG DATE	

NASSAU COUNTY PROPERTY

PAGE 3 of 4 2

VALUATION SUMMARY

VALUATION BY	STANDARD
Tax Group: 2	Tax Dist:
BUILDING MARKET VALUE	1,242,669
TOTAL MARKET OB/XF VALUE	24,478
TOTAL LAND VALUE - MARKET	207,694
TOTAL MARKET VALUE	1,474,841
SOH/AGL Deduction	441,687
ASSESSED VALUE	1,033,154
TOTAL EXEMPTION VALUE	0
BASE TAXABLE VALUE	1,033,154
TOTAL JUST VALUE	1,474,841
NCON VALUE	0
INCOME VALUE	
PREVIOUS YEAR MKT VALUE	1,297,494

PERMIT NUM	DESCRIPTION	AMT	ISSUED
961003	XFOB	5,000	08/29/1996
8039	REMODEL	1,500	12/15/1993
7878	REMODEL	2,000	08/01/1993
6288B	NEW CONSTR	131,500	12/05/1990

SALES DATA

OFF RECORD Number	DATE	TYPE INST	Q U	V I	RSN CD	SALE PRICE
1704/0407	10/08/2010	WD	U	I	30	100
GRANTOR: HEARD JOHN H						
GRANTEE: HEARD LEASING LLC						
0441/0203	12/01/1984	FS	U	I		100
GRANTOR:						
GRANTEE:						

BUILDING NOTES

BUILDING DIMENSIONS

FOP=[YR=1993] W6 BAS=[YR=1993] W33 S3 FOP=[YR=1993] W20 N5 W15 S7 E5 S4 E30 N6 $ S6 W30 S34 UOP=[YR=1993] S5 E30 N5 W30 $ E30 S24 E8 FOP=[YR=1993] S8 E3 S4 E12 N4 E2 N8 W17 $ E25 N67 $ S6 E6 N6 $ PTR= E15 FGR=[YR=1993] E33 S26 UST=[YR=1993] S21 W33 N21 E13 S2 E7 N2 E13 $ W13 S2 W7 N2 W13 N26 $ W15 $.

EXTRA FEATURES

LN	OB/XF CODE	DESCRIPTION	BLD	CAP	L	W	UNITS	UT	Adj R	ADJ UNIT PRICE	ORIG COND	YEAR ON	YEAR ACTUAL	Q	% COND	OB/XF MKT VALUE	NOTES
22	1241	WD DECK G	0	0	3	3	9.00	UT	11.50	11.50	100	1993	1993	3	20	21	
23	0097	AWNING CN	0	0	0	0	3.00	SF	65.00	65.00	100	1993	1993	3	40	78	
24	1241	WD DECK G	0	0	4	3	12.00	UT	11.50	11.50	100	1993	1993	3	20	28	
25	0097	AWNING CN	0	0	0	0	8.00	SF	65.00	65.00	100	1993	1993	3	40	208	
26	0097	AWNING CN	0	0	0	0	8.00	SF	65.00	65.00	100	1993	1993	3	40	208	
27	0810	CONCRETE A	0	0	0	0	162.00	SF	6.50	6.50	100	1991	1991	3	64	674	
28	0810	CONCRETE A	0	0	0	0	90.00	SF	6.50	6.50	100	2010	2010	3	92	538	
29	0400	CONC CURB	0	0	0	0	30.00	LF	15.00	15.00	100	2010	2010	3	94	423	
30	0350	CARPORT WD	0	0	18	18	324.00	SF	13.00	13.00	100	2000	2000	3	20	842	
31	0441	STK FNC 4'	0	0	0	0	16.00	LF	6.50	6.50	100	2005	2005	3	27	28	

TOTAL OB/XF 3,048

LAND DESCRIPTION

LN	USE CODE	CLS	LAND USE DESCRIPTION	CAP	RD	LOC ZONE	FRONT	DEPTH	TOT LND UTS	UNIT TYPE	DT	DPTH FACT	% COND	TOT ADJ	UNIT PRICE	ADJ UNIT PRICE	LAND VALUE	OTHER ADJUSTMENTS AND NOTES	YEAR	DENSITY	DECL	FRZ	YR	CONSRV

REVIEW DATE 09/29/2021 BY KK Total Acres: 0.00 Total Land Value: 207,694 Market: 0 Agricultural: 0 Common: 207,694 PRINTED 08/02/2023 BY SYS

BLK 244 LOT 1
IN OR 1704/407
CITY OF FDNA BEACH S/D OF

HEARD LEASING LLC
P O BOX 693
FERNANDINA BEACH, FL 32035-0693

2023

00-00-31-1800-0244-0010

BUILDING CHARACTERISTICS

ELEMENT	CD	CONSTRUCTION
Exterior Wall	12	CEDAR 100
Roof Structur	04	WOOD TRUSS 100
Roof Cover	12	MODULAR MT 100
Interior Wall	05	DRYWALL 100
Interior Floo	14	CARPET 100
Ceiling	02	F.NOT SUS 100
Air Condition	03	CENTRAL 100
Heating Type	04	AIR DUCTED 100
Fixtures		2 100
Frame	02	WOOD FRAME 100
Story Height		10 100
RMS		2 100
Stories	1.	1. 100
Units		0 100
Occupancy	00	NONE 100
Quality	04	Quality Level 04
DOR CODE	7600	MORTUARY/CEMETERY
MAP NUM		MKT AREA 01
NEIGHBORHOOD/LOC	1005.00	

AREA TYPE	TOTAL GROSS AREA	PCT OF BASE	TOT ADJ AREA	SUBAREA MARKET VALUE
BAS	387	100	387	41,787
SFB	90	80	72	7,774
TOTALS	477		459	49,561

MARKET ADJUSTMENTS

TYPE	MDL	EFF. AREA	TOT ADJ PTS	EFF. BASE RATE	REPL. COST NEW	AYB	EYB	ECON	FNCT		NORM	% COND
1701	04	459	108.6278	154.25	70,801	1994	1994	0	0	0	30.00	70.00

4 OFFICE 1&2 – 0% - 0 Heated Area: 459 HX Base Yr

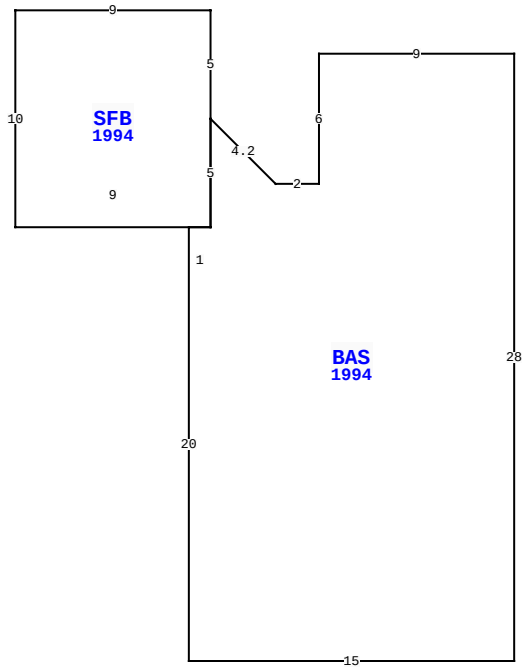

1305 ATLANTIC AV, FERNANDINA BEACH

BLD DATE	09/29/2021	KK	LGL DATE	
XF DATE	09/29/2021	KK	LAND DATE	09/29/2021 KK
INC DATE			AG DATE	

NASSAU COUNTY PROPERTY

PAGE 4 of 4 2

VALUATION SUMMARY

VALUATION BY	STANDARD
Tax Group: 2	Tax Dist:
BUILDING MARKET VALUE	1,242,669
TOTAL MARKET OB/XF VALUE	24,478
TOTAL LAND VALUE - MARKET	207,694
TOTAL MARKET VALUE	1,474,841
SOH/AGL Deduction	441,687
ASSESSED VALUE	1,033,154
TOTAL EXEMPTION VALUE	0
BASE TAXABLE VALUE	1,033,154
TOTAL JUST VALUE	1,474,841
NCON VALUE	0
INCOME VALUE	
PREVIOUS YEAR MKT VALUE	1,297,494

PERMIT NUM	DESCRIPTION	AMT	ISSUED

SALES DATA

OFF RECORD Number	DATE	TYPE INST	Q / U	V / I	RSN CD	SALE PRICE
1704/0407	10/08/2010	WD	U	I	30	100
GRANTOR: HEARD JOHN H						
GRANTEE: HEARD LEASING LLC						
0441/0203	12/01/1984	FS	U	I		100
GRANTOR:						
GRANTEE:						

BUILDING NOTES

BUILDING DIMENSIONS

BAS=[YR=1994] W9 S6 W2 U3 L3 SFB=[YR=1994] N5 W9 S10 E9 N5$ S5 W1 S20 E15 N28$.

EXTRA FEATURES

LN	OB/XF CODE	DESCRIPTION	BLD	CAP	L	W	UNITS	UT	Adj R	ADJ UNIT PRICE	ORIG COND	YEAR ON	YEAR ACTUAL	Q	% COND	OB/XF MKT VALUE	NOTES
32	1241	WD DECK G	0	0	0	0	20.00	UT	11.50	11.50	100	2005	2005	3	44	101	

LAND DESCRIPTION

TOTAL OB/XF 101

LN	USE CODE	CLS	LAND USE DESCRIPTION	CAP	RD	LOC ZONE	FRONT	DEPTH	TOT LND UTS	UNIT TYPE	DT	DPTH FACT	% COND	TOT ADJ	UNIT PRICE	ADJ UNIT PRICE	LAND VALUE	OTHER ADJUSTMENTS AND NOTES	YEAR	DENSITY	DECL	FRZ	YR	CONSRV

REVIEW DATE 09/29/2021 BY KK Total Acres: 0.00 Total Land Value: 207,694 Market: 0 Agricultural: 0 Common: 207,694 PRINTED 08/02/2023 BY SYS