ALL OF BLOCKS 197 & 235 & PT
OF BLOCK 211 IN OR 2568/1843 &
PT ABDN R/W PT OR 566/535-38

SREIT VINTAGE AMELIA LLC
C/O STARWOOD CAPITAL GROUP, 591 WEST PUTNAM AVE
GREENWICH, CT 06830

2023

00-00-31-1800-0197-0000

NASSAU COUNTY PROPERTY

BUILDING CHARACTERISTICS

ELEMENT	CD	CONSTRUCTION
Exterior Wall	10	ABOVE AVG 100
Roof Structur	04	WOOD TRUSS 100
Roof Cover	03	COMP SHNGL 100
Interior Wall	05	DRYWALL 100
Interior Floo	11	CLAY TILE 70
Interior Floo	14	CARPET 30
Ceiling	02	F.NOT SUS 100
Air Condition	03	CENTRAL 100
Heating Type	04	AIR DUCTED 100
Fixtures		19 100
Frame	02	WOOD FRAME 100
Story Height		11 100
RMS		6 100
Stories	1.	1. 100
Units		0 100
Occupancy	00	NONE 100
Quality	04	Quality Level 04
DOR CODE	0300	MULTI-FAMILY
MAP NUM		MKT AREA 01
NEIGHBORHOOD/LOC	2002.00	

AREA TYPE	TOTAL GROSS AREA	PCT OF BASE	TOT ADJ AREA	SUBAREA MARKET VALUE
BAS	5,240	100	5,240	754,277
CAN	50	30	15	2,159
CAN	56	30	17	2,447
CAN	358	30	107	15,402
CAN	1,423	30	427	61,465
FST	42	50	21	3,022
TOTALS	7,169		5,827	838,774

MARKET ADJUSTMENTS

TYPE	MDL	EFF. AREA	TOT ADJ PTS	EFF. BASE RATE	REPL. COST NEW	AYB	EYB	ECON	FNCT		NORM	% COND
0303	04	5,827	130.1092	145.40	847,246	2019	2019	0	0	0	1.00	99.00

1 CLUB HOUSE – 0% - 2023 Heated Area: 5240 HX Base Yr

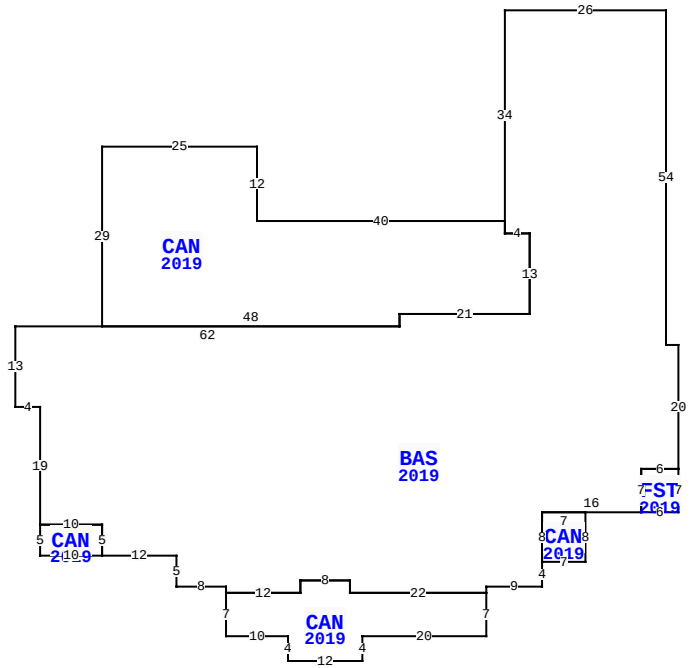

2 VINTAGE WAY, FERNANDINA BEACH

BLD DATE	06/26/2020	KK	LGL DATE	
XF DATE	06/26/2020	KK	LAND DATE	06/26/2020 KK
INC DATE			AG DATE	

NASSAU COUNTY PROPERTY — VALUATION SUMMARY

VALUATION BY	DIRECT_CAP
Tax Group: 2	Tax Dist:
BUILDING MARKET VALUE	0
TOTAL MARKET OB/XF VALUE	0
TOTAL LAND VALUE - MARKET	0
TOTAL MARKET VALUE	52,977,319
SOH/AGL Deduction	0
ASSESSED VALUE	52,977,319
TOTAL EXEMPTION VALUE	0
BASE TAXABLE VALUE	52,977,319
TOTAL JUST VALUE	52,977,319
NCON VALUE	0
INCOME VALUE	52,977,319
PREVIOUS YEAR MKT VALUE	36,821,372

PERMIT NUM	DESCRIPTION	AMT	ISSUED
20190050	SWIM POOL	205,665	06/04/2019
20181334	NEW CONSTR-BLDG 4	2,635,729	04/20/2018
20181335	NEW CONSTR-BLDG 5	2,635,729	04/20/2018
20181336	NEW CONSTR-BLDG 6	2,635,729	04/20/2018
20181337	NEW CONSTR-BLDG 7	2,710,879	04/20/2018
20181338	NEW CONSTR-BLDG 8	2,710,879	04/20/2018

SALES DATA

OFF RECORD Number	DATE	TYPE INST	Q / U	V / I	RSN CD	SALE PRICE
2568/1843	6/08/2022	SW	Q	I	01	66,933,000
GRANTOR: VINTAGE AMELIA OWNER						
GRANTEE: SREIT VINTAGE AMELI						
2200/0197	5/31/2018	SW	U	V	30	3,000,000
GRANTOR: TDK LAND LLC						
GRANTEE: VINTAGE AMELIA OWNE						

BUILDING NOTES

BUILDING DIMENSIONS

BAS=[YR=2019] W26 S34 CAN=[YR=2019] W40 N12 W25 S29 E48 N2 E21 N13 W4 N2$ S2 E4 S13 W21 S2 W62 S13 E4 S19 CAN=[YR=2019] S5 E10 N5 W10$ E10 S5 E12 S5 E8 S1 CAN=[YR=2019] S7 E10 S4 E12 N4 E20 N7 W22 N2 W8 S2 W12$ E12 N2 E8 S2 E22 N1 E9 N4 CAN=[YR=2019] E7 N8 W7 S8$ N8 E16 FST=[YR=2019] E6 N7 W6 S7$ N7 E6 N20 W2 N54$.

EXTRA FEATURES

LN	OB/XF CODE	DESCRIPTION	BLD	CAP	L	W	UNITS	UT	Adj R	ADJ UNIT PRICE	ORIG COND	YEAR ON	YEAR ACTUAL	Q	% COND	OB/XF MKT VALUE	NOTES
1	0803	ASPHALT C	0	0	0	0	9,244.00	SF	2.00	2.00	100	2019	2019	3	86	15,900	
2	0812	CONCRETE C	0	0	0	0	1,941.00	SF	4.00	4.00	100	2019	2019	3	99	7,686	
3	0855	CONC PAVER	0	0	10	8	80.00	SF	10.00	10.00	100	2019	2019	3	99	792	
4	0400	CONC CURB	0	0	0	0	256.00	LF	15.00	15.00	100	2019	2019	3	99	3,802	
5	0972	ST LGHT UN	0	0	0	0	3.00	UT	2,530.00	2,530.00	100	2019	2019	3	96	7,286	
6	0504	FP-ELECTRI	0	0	0	0	1.00	UT	10,000.00	10,000.00	100	2019	2019	3	99	9,900	
7	0861	POOL GUNIT	0	0	0	0	2,385.00	SF	85.00	85.00	100	2019	2019	3	93	188,534	
8	0812	CONCRETE C	0	0	0	0	5,933.00	SF	4.00	4.00	100	2019	2019	3	99	23,495	
9	0855	CONC PAVER	0	0	0	0	227.00	SF	10.00	10.00	100	2019	2019	3	99	2,247	
10	0462	ST/AL FNC	0	0	0	0	1,404.00	SF	10.00	10.00	100	2019	2019	3	93	13,057	

TOTAL OB/XF 272,699

LAND DESCRIPTION

LN	USE CODE	CLS	LAND USE DESCRIPTION	CAP	RD	LOC ZONE	FRONT	DEPTH	TOT LND UTS	UNIT TYPE	DT	DPTH FACT	% COND	TOT ADJ	UNIT PRICE	ADJ UNIT PRICE	LAND VALUE	OTHER ADJUSTMENTS AND NOTES	YEAR	DENSITY	DECL	FRZ	YR	CONSRV
1	000300	C	MULTI-FAM	0	0003	R-3	0.00	0.00	224.00	UT		1.00	1.00	1.00	20,000.00	20,000.00	4,480,000							

REVIEW DATE 06/26/2020 BY KK Total Acres: 0.00 Total Land Value: 0 Market: 0 Agricultural: 0 Common: 0 PRINTED 08/02/2023 BY SYS

ALL OF BLOCKS 197 & 235 & PT
OF BLOCK 211 IN OR 2568/1843 &
PT ABDN R/W PT OR 566/535-38

SREIT VINTAGE AMELIA LLC
C/O STARWOOD CAPITAL GROUP, 591 WEST PUTNAM AVE
GREENWICH, CT 06830

2023

00-00-31-1800-0197-0000

BUILDING CHARACTERISTICS

ELEMENT	CD	CONSTRUCTION
Exterior Wall	10	ABOVE AVG 100
Roof Structur	04	WOOD TRUSS 100
Roof Cover	03	COMP SHNGL 100
Interior Wall	05	DRYWALL 100
Interior Floo	13	LVT/LAMNT 70
Interior Floo	14	CARPET 30
Air Condition	03	CENTRAL 100
Heating Type	04	AIR DUCTED 100
Bedrooms		2 100
Bathrooms		2 100
Frame	02	WOOD FRAME 100
Story Height		10 100
RMS		0 100
Units		24 100
Quality	04	Quality Level 04
DOR CODE	0300	MULTI-FAMILY
MAP NUM		MKT AREA 01
NEIGHBORHOOD/LOC	2002.00	

AREA TYPE	TOTAL GROSS AREA	PCT OF BASE	TOT ADJ AREA	SUBAREA MARKET VALUE
BAS	2,359	100	2,359	457,414
BAS	2,359	100	2,359	457,414
BAS	3,126	100	3,126	606,135
CAN	362	30	109	21,136
CAN	362	30	109	21,136
CAN	466	30	140	27,146
CAN	466	30	140	27,146
CAN	630	30	189	36,648
CAN	630	30	189	36,648
FOP	84	30	25	4,848
TOTALS	28,162		25,216	4,889,418

MARKET ADJUSTMENTS

TYPE	MDL	EFF. AREA	TOT ADJ PTS	EFF. BASE RATE	REPL. COST NEW	AYB	EYB	ECON	FNCT		NORM	% COND
0302	03	25,216	109.7250	195.86	4,938,806	2019	2019	0	0	0	1.00	99.00

2 APART/LUX – 0% - 2023 Heated Area: 23532 HX Base Yr

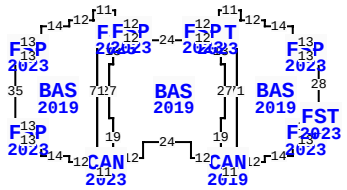

** This building has 40 Sub-Areas

2 VINTAGE WAY, FERNANDINA BEACH

BLD DATE	06/26/2020 KK	LGL DATE	
XF DATE	06/26/2020 KK	LAND DATE	06/26/2020 KK
INC DATE		AG DATE	

NASSAU COUNTY PROPERTY

PAGE 2 of 16 2

VALUATION SUMMARY

VALUATION BY	DIRECT_CAP
Tax Group: 2	Tax Dist:
BUILDING MARKET VALUE	0
TOTAL MARKET OB/XF VALUE	0
TOTAL LAND VALUE - MARKET	0
TOTAL MARKET VALUE	52,977,319
SOH/AGL Deduction	0
ASSESSED VALUE	52,977,319
TOTAL EXEMPTION VALUE	0
BASE TAXABLE VALUE	52,977,319
TOTAL JUST VALUE	52,977,319
NCON VALUE	0
INCOME VALUE	52,977,319
PREVIOUS YEAR MKT VALUE	36,821,372

PERMIT NUM	DESCRIPTION	AMT	ISSUED
20181339	NEW CONSTR-BLDG 9	2,635,729	04/20/2018
20181340	NEW CONSTR-MAINT	38,383	04/20/2018
20181343	NEW CONSTR-BLDG C	365,671	04/20/2018
20181345	NEW CONSTR-BLDG C	365,671	04/20/2018
20181346	NEW CONSTR-BLDG C	365,671	04/20/2018
20181347	NEW CONSTR-BLDG C	365,671	04/20/2018

SALES DATA

OFF RECORD Number	DATE	TYPE INST	Q / U	V / I	RSN CD	SALE PRICE
2568/1843	6/08/2022	SW	Q	I	01	66,933,000
GRANTOR: VINTAGE AMELIA OWNER						
GRANTEE: SREIT VINTAGE AMELI						
2200/0197	5/31/2018	SW	U	V	30	3,000,000
GRANTOR: TDK LAND LLC						
GRANTEE: VINTAGE AMELIA OWNE						

BUILDING NOTES

EXTRA FEATURES

LN	OB/XF CODE	DESCRIPTION	BLD	CAP	L	W	UNITS	UT	Adj R	ADJ UNIT PRICE	ORIG COND	YEAR ON	YEAR ACTUAL	Q	% COND	OB/XF MKT VALUE	NOTES
11	0649	LIGHTS-GD	0	0	0	0	19.00	SF	225.00	225.00	100	2019	2019	3	90	3,848	
12	0648	LIGHTS-AV	0	0	0	0	13.00	UT	140.00	140.00	100	2019	2019	3	90	1,638	
13	1075	TRELLIS G	0	0	16	12	192.00	SF	35.00	35.00	100	2019	2019	3	93	6,250	
14	1075	TRELLIS G	0	0	21	6	126.00	SF	35.00	35.00	100	2019	2019	3	93	4,101	
15	1075	TRELLIS G	0	0	21	6	126.00	SF	35.00	35.00	100	2019	2019	3	93	4,101	
16	0600	SUMMER KIT	0	0	0	0	1.00	UT	5,000.00	5,000.00	100	2019	2019	3	90	4,500	
17	0142	BAR TOP A	0	0	0	0	14.00	LF	165.00	165.00	100	2019	2019	3	90	2,079	
18	0504	FP-ELECTRI	0	0	0	0	1.00	UT	2,000.00	2,000.00	100	2019	2019	3	99	1,980	
19	0803	ASPHALT C	0	0	0	0	6,320.00	SF	2.00	2.00	100	2019	2019	3	86	10,870	
20	0972	ST LGHT UN	0	0	0	0	2.00	UT	2,530.00	2,530.00	100	2019	2019	3	96	4,858	

TOTAL OB/XF 44,225

BUILDING DIMENSIONS

BAS=[YR=2019;ORIG=10,10] W13 N7 N8 W14 N3 W12 W2 S71 E2 E12 N3 E14 N8 N7 E13 N2 N5 N28 $
CAN=[YR=2019;ORIG=-29,-8] N5 W11 S8 E1 S6 S13 E2 S27 W2 S19 W1 S8 E11 N5 W2 N71 E2 $
BAS=[YR=2019;ORIG=-39,1] W3 W12 S1 W24 N1 W12 W3 S13 W2 S27 E2 S19 E1 E2 S1 E12 N8 E24 S8 E12 N1 E2 E1 N19 E2 N27 W2 N13 $
CAN=[YR=2023;ORIG=-93,14] N13 N6 E1 N8 W11 S5 E2 S71 W2 S5 E11 N8 W1 N19 W2 N27 E2 $
BAS=[YR=2019;ORIG=-101,-8] W2 W12 S3 W14 S8 S7 W13 S35 E13 S7 S8 E14 S3 E12 E2 N71 $
FSP=[YR=2023;ORIG=-3,3] E13 S7 W13 N7 $

LAND DESCRIPTION

LN	USE CODE	CLS	LAND USE DESCRIPTION	CAP	RD	LOC ZONE	FRONT	DEPTH	TOT LND UTS	UNIT TYPE	DT	DPTH FACT	% COND	TOT ADJ	UNIT PRICE	ADJ UNIT PRICE	LAND VALUE	OTHER ADJUSTMENTS AND NOTES	YEAR	DENSITY	DECL	FRZ	YR	CONSRV

REVIEW DATE 06/26/2020 BY KK Total Acres: 0.00 Total Land Value: 0 Market: 0 Agricultural: 0 Common: 0 PRINTED 08/02/2023 BY SYS

ALL OF BLOCKS 197 & 235 & PT
OF BLOCK 211 IN OR 2568/1843 &
PT ABDN R/W PT OR 566/535-38

SREIT VINTAGE AMELIA LLC
C/O STARWOOD CAPITAL GROUP, 591 WEST PUTNAM AVE
GREENWICH, CT 06830

2023

00-00-31-1800-0197-0000

NASSAU COUNTY PROPERTY

BUILDING CHARACTERISTICS

ELEMENT	CD	CONSTRUCTION
Exterior Wall	10	ABOVE AVG 100
Roof Structur	04	WOOD TRUSS 100
Roof Cover	03	COMP SHNGL 100
Interior Wall	05	DRYWALL 100
Interior Floo	13	LVT/LAMNT 70
Interior Floo	14	CARPET 30
Air Condition	03	CENTRAL 100
Heating Type	04	AIR DUCTED 100
Bedrooms		2 100
Bathrooms		2 100
Frame	02	WOOD FRAME 100
Story Height		10 100
RMS		0 100
Units		2 100
Quality	04	Quality Level 04

DOR CODE	0300	MULTI-FAMILY	
MAP NUM		MKT AREA	01
NEIGHBORHOOD/LOC	2002.00		

AREA TYPE	TOTAL GROSS AREA	PCT OF BASE	TOT ADJ AREA	SUBAREA MARKET VALUE
BAS	92	100	92	19,341
BAS	92	100	92	19,341
CAN	45	30	14	2,943
CAN	45	30	14	2,943
FGR	1,760	55	968	203,499
FSP	99	55	54	11,352
FSP	99	55	54	11,352
FST	45	55	25	5,256
FST	473	55	260	54,659
FUS	1,105	100	1,105	232,301
TOTALS	4,960		3,783	795,287

MARKET ADJUSTMENTS

TYPE	MDL	EFF. AREA	TOT ADJ PTS	EFF. BASE RATE	REPL. COST NEW	AYB	EYB	ECON	FNCT		NORM	% COND
0302	03	3,783	118.9650	212.35	803,320	2019	2019	0	0	0	1.00	99.00

3 APART/LUX – 0% - 2023 Heated Area: 2394 HX Base Yr

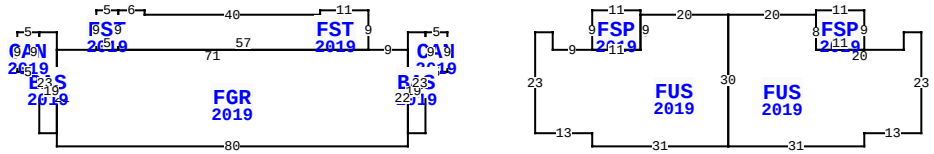

** This building has 11 Sub-Areas

2 VINTAGE WAY, FERNANDINA BEACH

BLD DATE	06/26/2020	KK	LGL DATE	
XF DATE	06/26/2020	KK	LAND DATE	06/26/2020 KK
INC DATE			AG DATE	

VALUATION SUMMARY

VALUATION BY	DIRECT_CAP
Tax Group: 2	Tax Dist:
BUILDING MARKET VALUE	0
TOTAL MARKET OB/XF VALUE	0
TOTAL LAND VALUE - MARKET	0
TOTAL MARKET VALUE	52,977,319
SOH/AGL Deduction	0
ASSESSED VALUE	52,977,319
TOTAL EXEMPTION VALUE	0
BASE TAXABLE VALUE	52,977,319
TOTAL JUST VALUE	52,977,319
NCON VALUE	0
INCOME VALUE	52,977,319
PREVIOUS YEAR MKT VALUE	36,821,372

PERMIT NUM	DESCRIPTION	AMT	ISSUED
20181356	OTHER-TREES & FIL	1,918,012	04/20/2018
20181323	NEW CONSTR-CLUBHO	713,708	04/20/2018
20181326	NEW CONSTR-BLDG 1	3,414,822	04/20/2018
20181331	NEW CONSTR-BLDG 2	2,710,879	04/20/2018
20181332	NEW CONSTR-BLDG 3	2,710,879	04/20/2018

SALES DATA

OFF RECORD Number	DATE	TYPE INST	Q / U	V / I	RSN CD	SALE PRICE
2568/1843	6/08/2022	SW	Q	I	01	66,933,000
GRANTOR: VINTAGE AMELIA OWNER						
GRANTEE: SREIT VINTAGE AMELI						
2200/0197	5/31/2018	SW	U	V	30	3,000,000
GRANTOR: TDK LAND LLC						
GRANTEE: VINTAGE AMELIA OWNE						

BUILDING NOTES

BUILDING DIMENSIONS

CAN=[YR=2019] W5 BAS=[YR=2019] W4 S4 FGR=[YR=2019] W9 FST=[YR=2019] N9 W11 S1 W40 N1 W6 FST=[YR=2019] W5 S9 E5 N9 $ S9 E57$ W71 BAS=[YR=2019] N4 W4 CAN=[YR=2019] W5 S9 E5 N9$ S23 E4 N19$ S22 E80 N22$ S19 E4 N23$ S9 E5 N9$ PTR= E20 FUS=[YR=2019] E4 S4 E9 FSP=[YR=2019] N9 E11 S9 W11$ E11 N8 E20 FUS=[YR=2019] E20 FSP=[YR=2019] N1 E11 S9 W11 N8$ S8 E20 N4 E4 S23 W13 S3 W31 N30$ S30 W31 N3 W13 N23$ W20$.

EXTRA FEATURES

LN	OB/XF CODE	DESCRIPTION	BLD	CAP	L	W	UNITS	UT	Adj R	ADJ UNIT PRICE	ORIG COND	YEAR ON	YEAR ACTUAL	Q	% COND	OB/XF MKT VALUE	NOTES
21	0810	CONCRETE A	0	0	25	17	425.00	SF	6.50	6.50	100	2019	2019	3	99	2,735	
22	0812	CONCRETE C	0	0	0	0	2,364.00	SF	4.00	4.00	100	2019	2019	3	99	9,361	
23	0856	POROUS CC	0	0	0	0	7,069.00	SF	2.50	2.50	100	2019	2019	3	99	17,496	
24	0400	CONC CURB	0	0	0	0	260.00	LF	15.00	15.00	100	2019	2019	3	99	3,861	
25	0462	ST/AL FNC	0	0	88	6	528.00	SF	10.00	10.00	100	2019	2019	3	93	4,910	
26	0812	CONCRETE C	0	0	0	0	6,141.00	SF	4.00	4.00	100	2019	2019	3	99	24,318	
27	0856	POROUS CC	0	0	0	0	13,634.00	SF	2.50	2.50	100	2019	2019	3	99	33,744	
28	0400	CONC CURB	0	0	0	0	1,103.00	LF	15.00	15.00	100	2019	2019	3	99	16,380	
29	0810	CONCRETE A	0	0	20	16	320.00	SF	6.50	6.50	100	2019	2019	3	99	2,059	
30	0812	CONCRETE C	0	0	0	0	6,141.00	SF	4.00	4.00	100	2019	2019	3	99	24,318	

TOTAL OB/XF 139,182

LAND DESCRIPTION

LN	USE CODE	CLS	LAND USE DESCRIPTION	CAP	RD	LOC ZONE	FRONT	DEPTH	TOT LND UTS	UNIT TYPE	DT	DPTH FACT	% COND	TOT ADJ	UNIT PRICE	ADJ UNIT PRICE	LAND VALUE	OTHER ADJUSTMENTS AND NOTES	YEAR	DENSITY	DECL	FRZ	YR	CONSRV

REVIEW DATE 06/26/2020 BY KK Total Acres: 0.00 Total Land Value: 0 Market: 0 Agricultural: 0 Common: 0 PRINTED 08/02/2023 BY SYS

ALL OF BLOCKS 197 & 235 & PT
OF BLOCK 211 IN OR 2568/1843 &
PT ABDN R/W PT OR 566/535-38

SREIT VINTAGE AMELIA LLC
C/O STARWOOD CAPITAL GROUP, 591 WEST PUTNAM AVE
GREENWICH, CT 06830

2023

00-00-31-1800-0197-0000

NASSAU COUNTY PROPERTY

BUILDING CHARACTERISTICS

ELEMENT	CD	CONSTRUCTION
Exterior Wall	10	ABOVE AVG 100
Roof Structur	04	WOOD TRUSS 100
Roof Cover	03	COMP SHNGL 100
Interior Wall	05	DRYWALL 100
Interior Floo	13	LVT/LAMNT 70
Interior Floo	14	CARPET 30
Air Condition	03	CENTRAL 100
Heating Type	04	AIR DUCTED 100
Bedrooms		2 100
Bathrooms		2 100
Frame	02	WOOD FRAME 100
Story Height		10 100
RMS		0 100
Units		24 100
Quality	04	Quality Level 04

DOR CODE	0300	MULTI-FAMILY	
MAP NUM		MKT AREA	01
NEIGHBORHOOD/LOC	2002.00		

AREA TYPE	TOTAL GROSS AREA	PCT OF BASE	TOT ADJ AREA	SUBAREA MARKET VALUE
BAS	2,359	100	2,359	457,414
BAS	2,359	100	2,359	457,414
BAS	3,126	100	3,126	606,135
CAN	362	30	109	21,136
CAN	362	30	109	21,136
CAN	466	30	140	27,146
CAN	466	30	140	27,146
CAN	630	30	189	36,648
CAN	630	30	189	36,648
FOP	84	30	25	4,848
TOTALS	28,155		25,214	4,889,030

MARKET ADJUSTMENTS

TYPE	MDL	EFF. AREA	TOT ADJ PTS	EFF. BASE RATE	REPL. COST NEW	AYB	EYB	ECON	FNCT		NORM	% COND
0302	03	25,214	109.7250	195.86	4,938,414	2019	2019	0	0	0	1.00	99.00

4 APART/LUX – 0% - 2023 Heated Area: 23532 HX Base Yr

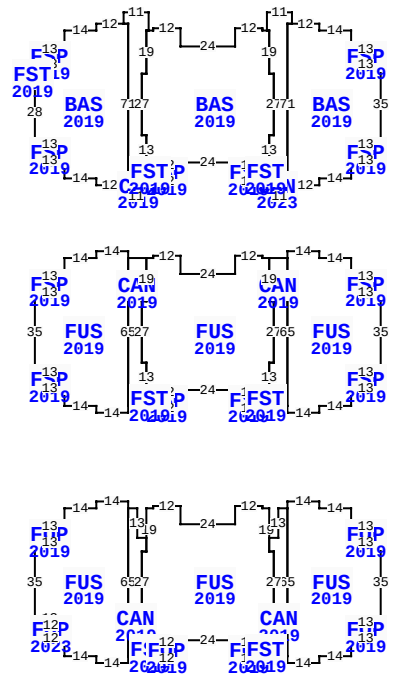

** This building has 40 Sub-Areas

2 VINTAGE WAY, FERNANDINA BEACH

BLD DATE	06/26/2020	KK	LGL DATE
XF DATE	06/26/2020	KK	LAND DATE 06/26/2020 KK
INC DATE			AG DATE

EXTRA FEATURES

L N	OB/XF CODE	DESCRIPTION	BLD	CAP	L	W	UNITS	UT	Adj R	ADJ UNIT PRICE	ORIG COND	YEAR ON	YEAR ACTUAL	Q	% COND	OB/XF MKT VALUE	NOTES
31	0972	ST LGHT UN	0	0	0	0	7.00	UT	2,530.00	2,530.00	100	2019	2019	3	96	17,002	
32	0803	ASPHALT C	0	0	0	0	19,031.00	SF	2.00	2.00	100	2019	2019	3	86	32,733	
33	0803	ASPHALT C	0	0	0	0	24,520.00	SF	2.00	2.00	100	2019	2019	3	86	42,174	
34	0092	AUTO GATE	0	0	0	0	2.00	UT	3,500.00	3,500.00	100	2019	2019	3	90	6,300	
35	0972	ST LGHT UN	0	0	0	0	9.00	UT	2,530.00	2,530.00	100	2019	2019	3	96	21,859	
36	0812	CONCRETE C	0	0	0	0	8,305.00	SF	4.00	4.00	100	2019	2019	3	99	32,888	
37	0856	POROUS CC	0	0	0	0	13,821.00	SF	2.50	2.50	100	2019	2019	3	99	34,207	
38	0462	ST/AL FNC	0	0	32	6	192.00	SF	10.00	10.00	100	2019	2019	3	93	1,786	
39	0856	POROUS CC	0	0	18	17	306.00	SF	2.50	2.50	100	2019	2019	3	99	757	
40	0856	POROUS CC	0	0	0	0	1,440.00	SF	2.50	2.50	100	2019	2019	3	99	3,564	

TOTAL OB/XF 193,270

VALUATION SUMMARY

VALUATION BY	DIRECT_CAP
Tax Group: 2	Tax Dist:
BUILDING MARKET VALUE	0
TOTAL MARKET OB/XF VALUE	0
TOTAL LAND VALUE - MARKET	0
TOTAL MARKET VALUE	52,977,319
SOH/AGL Deduction	0
ASSESSED VALUE	52,977,319
TOTAL EXEMPTION VALUE	0
BASE TAXABLE VALUE	52,977,319
TOTAL JUST VALUE	52,977,319
NCON VALUE	0
INCOME VALUE	52,977,319
PREVIOUS YEAR MKT VALUE	36,821,372

PERMIT NUM	DESCRIPTION	AMT	ISSUED

SALES DATA

OFF RECORD Number	DATE	TYPE INST	Q / U	V / I	RSN CD	SALE PRICE
2568/1843	6/08/2022	SW	Q	I	01	66,933,000
GRANTOR: VINTAGE AMELIA OWNER						
GRANTEE: SREIT VINTAGE AMELI						
2200/0197	5/31/2018	SW	U	V	30	3,000,000
GRANTOR: TDK LAND LLC						
GRANTEE: VINTAGE AMELIA OWNE						

BUILDING NOTES

BUILDING DIMENSIONS

BAS=[YR=2019;ORIG=-17,34] W2 N19 W1 W2 N1 W12 S8 W24 N8 W12 S1 W2 W1 S19 W2 S27 E2 S13 E3 E12 N1 E24 S1 E12 E3 N13 E2 N27 $
FUS=[YR=2019;ORIG=-19,115] W3 N1 W12 S8 W24 N8 W12 S1 W3 S19 W2 S27 E2 S13 E3 E12 N1 E24 S1 E12 E3 N13 E2 N27 W2 N19 $
BAS=[YR=2019;ORIG=30,30] W13 N7 N8 W14 N3 W12 W2 S71 E2 E12 N3 E14 N8 N7 E13 N35 $
BAS=[YR=2019;ORIG=-81,12] W2 W12 S3 W14 S8 S7 W13 S2 S5 S28 E13 S7 S8 E14 S3 E12 E2 N71 $
FUS=[YR=2019;ORIG=30,130] W13 N7 N8 W14 N3 W14 S3 S65 S3 E14 N3 E14 N8 N7 E13 N35 $
FUS=[YR=2019;ORIG=-81,112] S3 S65 S3 W14 N3 W14 N8 N7 W13 N35

LAND DESCRIPTION

L N	USE CODE	CLS	LAND USE DESCRIPTION	CAP	R D	LOC ZONE	FRONT	DEPTH	TOT LND UTS	UNIT TYPE	D T	DPTH FACT	% COND	TOT ADJ	UNIT PRICE	ADJ UNIT PRICE	LAND VALUE	OTHER ADJUSTMENTS AND NOTES	YEAR	DENSITY	DECL	FRZ	YR	CONSRV

REVIEW DATE 06/26/2020 BY KK Total Acres: 0.00 Total Land Value: 0 Market: 0 Agricultural: 0 Common: 0 PRINTED 08/02/2023 BY SYS

ALL OF BLOCKS 197 & 235 & PT
OF BLOCK 211 IN OR 2568/1843 &
PT ABDN R/W PT OR 566/535-38

SREIT VINTAGE AMELIA LLC
C/O STARWOOD CAPITAL GROUP, 591 WEST PUTNAM AVE
GREENWICH, CT 06830

2023

00-00-31-1800-0197-0000

NASSAU COUNTY PROPERTY

BUILDING CHARACTERISTICS

ELEMENT	CD	CONSTRUCTION
Exterior Wall	10	ABOVE AVG 100
Roof Structur	04	WOOD TRUSS 100
Roof Cover	03	COMP SHNGL 100
Interior Wall	05	DRYWALL 100
Interior Floo	13	LVT/LAMNT 70
Interior Floo	14	CARPET 30
Air Condition	03	CENTRAL 100
Heating Type	04	AIR DUCTED 100
Bedrooms		2 100
Bathrooms		2 100
Frame	02	WOOD FRAME 100
Story Height		10 100
RMS		0 100
Units		2 100
Quality	04	Quality Level 04

DOR CODE 0300 MULTI-FAMILY
MAP NUM | MKT AREA 01
NEIGHBORHOOD/LOC 2002.00

AREA TYPE	TOTAL GROSS AREA	PCT OF BASE	TOT ADJ AREA	SUBAREA MARKET VALUE
BAS	92	100	92	19,341
BAS	92	100	92	19,341
CAN	45	30	14	2,943
CAN	45	30	14	2,943
FGR	1,760	55	968	203,499
FSP	99	55	54	11,352
FSP	99	55	54	11,352
FST	45	55	25	5,256
FST	473	55	260	54,659
FUS	1,105	100	1,105	232,301
TOTALS	4,960		3,783	795,287

MARKET ADJUSTMENTS

TYPE	MDL	EFF. AREA	TOT ADJ PTS	EFF. BASE RATE	REPL. COST NEW	AYB	EYB	ECON	FNCT		NORM	% COND
0302	03	3,783	118.9650	212.35	803,320	2019	2019	0	0	0	1.00	99.00

5 APART/LUX – 0% - 2023 Heated Area: 2394 HX Base Yr

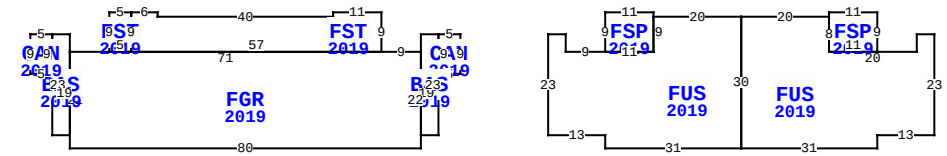

** This building has 11 Sub-Areas
2 VINTAGE WAY, FERNANDINA BEACH

BLD DATE	06/26/2020	KK	LGL DATE		
XF DATE	06/26/2020	KK	LAND DATE	06/26/2020	KK
INC DATE			AG DATE		

VALUATION SUMMARY

VALUATION BY	DIRECT_CAP
Tax Group: 2	Tax Dist:
BUILDING MARKET VALUE	0
TOTAL MARKET OB/XF VALUE	0
TOTAL LAND VALUE - MARKET	0
TOTAL MARKET VALUE	52,977,319
SOH/AGL Deduction	0
ASSESSED VALUE	52,977,319
TOTAL EXEMPTION VALUE	0
BASE TAXABLE VALUE	52,977,319
TOTAL JUST VALUE	52,977,319
NCON VALUE	0
INCOME VALUE	52,977,319
PREVIOUS YEAR MKT VALUE	36,821,372

PERMIT NUM	DESCRIPTION	AMT	ISSUED

SALES DATA

OFF RECORD Number	DATE	TYPE INST	Q / U	V / I	RSN CD	SALE PRICE
2568/1843	6/08/2022	SW	Q	I	01	66,933,000
GRANTOR: VINTAGE AMELIA OWNER						
GRANTEE: SREIT VINTAGE AMELI						
2200/0197	5/31/2018	SW	U	V	30	3,000,000
GRANTOR: TDK LAND LLC						
GRANTEE: VINTAGE AMELIA OWNE						

BUILDING NOTES

BUILDING DIMENSIONS

CAN=[YR=2019] W5 BAS=[YR=2019] W4 S4 FGR=[YR=2019] W9 FST=[YR=2019] N9 W11 S1 W40 N1 W6 FST=[YR=2019] W5 S9 E5 N9 $ S9 E57$ W71 BAS=[YR=2019] N4 W4 CAN=[YR=2019] W5 S9 E5 N9$ S23 E4 N19$ S22 E80 N22$ S19 E4 N23$ S9 E5 N9$ PTR= E20 FUS=[YR=2019] E4 S4 E9 FSP=[YR=2019] N9 E11 S9 W11$ E11 N8 E20 FUS=[YR=2019] E20 FSP=[YR=2019] N1 E11 S9 W11 N8$ S8 E20 N4 E4 S23 W13 S3 W31 N30$ S30 W31 N3 W13 N23$ W20$.

EXTRA FEATURES

L N	OB/XF CODE	DESCRIPTION	BLD	CAP	L	W	UNITS	UT	Adj R	ADJ UNIT PRICE	ORIG COND	YEAR ON	YEAR ACTUAL	Q	% COND	OB/XF MKT VALUE	NOTES
41	0424	CL FNC 6'	0	0	0	0	440.00	LF	20.00	20.00	100	2019	2019	3	96	8,448	
42	0812	CONCRETE C	0	0	0	0	1,217.00	SF	4.00	4.00	100	2019	2019	3	99	4,819	
43	0803	ASPHALT C	0	0	0	0	18,274.00	SF	2.00	2.00	100	2019	2019	3	86	31,431	
44	0092	AUTO GATE	0	0	0	0	2.00	UT	3,500.00	3,500.00	100	2019	2019	3	90	6,300	
45	0819	CONC 12"	0	0	14	3	42.00	SF	9.50	9.50	100	2019	2019	3	99	395	
46	0810	CONCRETE A	0	0	0	0	72.00	SF	6.50	6.50	100	2019	2019	3	99	463	
47	0855	CONC PAVER	0	0	0	0	4,164.00	SF	10.00	10.00	100	2019	2019	3	99	41,224	
48	0972	ST LGHT UN	0	0	0	0	8.00	UT	2,530.00	2,530.00	100	2019	2019	3	96	19,430	
49	1126	CB/STC 8"	0	0	0	0	50.00	SF	8.00	8.00	100	2019	2019	3	99	396	
50	0648	LIGHTS-AV	0	0	0	0	4.00	UT	140.00	140.00	100	2019	2019	3	90	504	

TOTAL OB/XF 113,410

LAND DESCRIPTION

L N	USE CODE	CLS	LAND USE DESCRIPTION	CAP	R D	LOC ZONE	FRONT	DEPTH	TOT LND UTS	UNIT TYPE	D T	DPTH FACT	% COND	TOT ADJ	UNIT PRICE	ADJ UNIT PRICE	LAND VALUE	OTHER ADJUSTMENTS AND NOTES	YEAR	DENSITY	DECL	FRZ	YR	CONSRV

REVIEW DATE 06/26/2020 BY KK Total Acres: 0.00 Total Land Value: 0 Market: 0 Agricultural: 0 Common: 0 PRINTED 08/02/2023 BY SYS

ALL OF BLOCKS 197 & 235 & PT
OF BLOCK 211 IN OR 2568/1843 &
PT ABDN R/W PT OR 566/535-38

SREIT VINTAGE AMELIA LLC
C/O STARWOOD CAPITAL GROUP, 591 WEST PUTNAM AVE
GREENWICH, CT 06830

2023

00-00-31-1800-0197-0000

BUILDING CHARACTERISTICS

ELEMENT	CD	CONSTRUCTION
Exterior Wall	10	ABOVE AVG 100
Roof Structur	04	WOOD TRUSS 100
Roof Cover	03	COMP SHNGL 100
Interior Wall	05	DRYWALL 100
Interior Floo	13	LVT/LAMNT 70
Interior Floo	14	CARPET 30
Air Condition	03	CENTRAL 100
Heating Type	04	AIR DUCTED 100
Bedrooms		3 100
Bathrooms		2 100
Frame	02	WOOD FRAME 100
Story Height		10 100
RMS		0 100
Units		24 100

Quality	04	Quality Level 04
DOR CODE	0300	MULTI-FAMILY
MAP NUM		MKT AREA 01
NEIGHBORHOOD/LOC	2002.00	

AREA TYPE	TOTAL GROSS AREA	PCT OF BASE	TOT ADJ AREA	SUBAREA MARKET VALUE
BAS	2,750	100	2,750	538,293
BAS	2,750	100	2,750	538,293
BAS	4,504	100	4,504	881,626
CAN	377	30	113	22,119
CAN	377	30	113	22,119
CAN	455	30	136	26,621
CAN	455	30	136	26,621
CAN	607	30	182	35,625
CAN	607	30	182	35,625
FOP	91	30	27	5,285
TOTALS	34,632		31,687	6,202,502

MARKET ADJUSTMENTS

TYPE	MDL	EFF. AREA	TOT ADJ PTS	EFF. BASE RATE	REPL. COST NEW	AYB	EYB	ECON	FNCT		NORM	% COND
0302	03	31,687	110.7700	197.72	6,265,154	2019	2019	0	0	0	1.00	99.00

6 APART/LUX – 0% - 2023 Heated Area: 30012 HX Base Yr

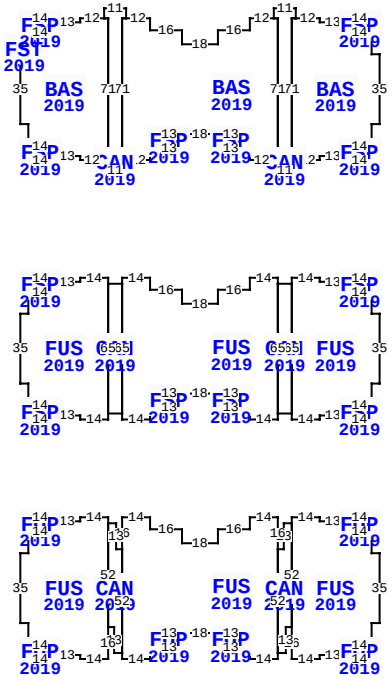

** This building has 34 Sub-Areas

2 VINTAGE WAY, FERNANDINA BEACH

BLD DATE	06/26/2020 KK	LGL DATE	
XF DATE	06/26/2020 KK	LAND DATE	06/26/2020 KK
INC DATE		AG DATE	

NASSAU COUNTY PROPERTY

PAGE 6 of 16 2

VALUATION SUMMARY

VALUATION BY	DIRECT_CAP
Tax Group: 2	Tax Dist:
BUILDING MARKET VALUE	0
TOTAL MARKET OB/XF VALUE	0
TOTAL LAND VALUE - MARKET	0
TOTAL MARKET VALUE	52,977,319
SOH/AGL Deduction	0
ASSESSED VALUE	52,977,319
TOTAL EXEMPTION VALUE	0
BASE TAXABLE VALUE	52,977,319
TOTAL JUST VALUE	52,977,319
NCON VALUE	0
INCOME VALUE	52,977,319
PREVIOUS YEAR MKT VALUE	36,821,372

PERMIT NUM	DESCRIPTION	AMT	ISSUED

SALES DATA

OFF RECORD Number	DATE	TYPE INST	Q / U	V / I	RSN CD	SALE PRICE
2568/1843	6/08/2022	SW	Q	I	01	66,933,000
GRANTOR: VINTAGE AMELIA OWNER						
GRANTEE: SREIT VINTAGE AMELI						
2200/0197	5/31/2018	SW	U	V	30	3,000,000
GRANTOR: TDK LAND LLC						
GRANTEE: VINTAGE AMELIA OWNE						

BUILDING NOTES

BUILDING DIMENSIONS

BAS=[YR=2019;ORIG=0,50] W14 N5 W13 N2 W12 W2 S71 E2 E12 N2 E13 N5 E14 N2 W1 N9 E4 N35 W4 N9 E1 N2 $
CAN=[YR=2019;ORIG=-39,43] N5 W11 S5 E2 S71 W2 S5 E11 N5 W2 N71 E2 $
BAS=[YR=2019;ORIG=-48,43] W2 W12 S6 W16 S7 W18 N7 W16 N6 W12 W2 S71 E2 E12 N6 E3 N7 E13 E18 E13 S7 E3 S6 E12 E2 N71 $
CAN=[YR=2019;ORIG=-124,43] N5 W11 S5 E2 S71 W2 S5 E11 N5 W2 N71 E2 $
BAS=[YR=2019;ORIG=-133,43] W2 W12 S2 W13 S5 W14 S2 E1 S4 S5 W4 S35 E4 S9 W1 S2 E14 S5 E13 S2 E12 E2 N71 $
FSP=[YR=2019;ORIG=-14,43] E14 S7 W14 N7 $
FSP=[YR=2019;ORIG=-14,107] E14 S7 W14 N7 $

EXTRA FEATURES

LN	OB/XF CODE	DESCRIPTION	BLD	CAP	L	W	UNITS	UT	Adj R	ADJ UNIT PRICE	ORIG COND	YEAR ON	YEAR ACTUAL	Q	% COND	OB/XF MKT VALUE	NOTES
51	0811	CONCRETE B	0	0	0	0	584.00	SF	5.20	5.20	100	2019	2019	3	99	3,006	
52	0819	CONC 12"	0	0	14	3	42.00	SF	9.50	9.50	100	2019	2019	3	99	395	
53	0092	AUTO GATE	0	0	0	0	2.00	UT	3,500.00	3,500.00	100	2019	2019	3	90	6,300	
54	0855	CONC PAVER	0	0	0	0	3,408.00	SF	10.00	10.00	100	2019	2019	3	99	33,739	
55	0810	CONCRETE A	0	0	0	0	107.00	SF	6.50	6.50	100	2019	2019	3	99	689	
56	0812	CONCRETE C	0	0	0	0	3,035.00	SF	4.00	4.00	100	2019	2019	3	99	12,019	
57	0400	CONC CURB	0	0	0	0	1,075.00	LF	15.00	15.00	100	2019	2019	3	99	15,964	
58	1126	CB/STC 8"	0	0	0	0	50.00	SF	8.00	8.00	100	2019	2019	3	99	396	
59	0648	LIGHTS-AV	0	0	0	0	4.00	UT	140.00	140.00	100	2019	2019	3	90	504	
60	1126	CB/STC 8"	0	0	0	0	240.00	SF	8.00	8.00	100	2019	2019	3	99	1,901	

TOTAL OB/XF 74,913

LAND DESCRIPTION

LN	USE CODE	CLS	LAND USE DESCRIPTION	CAP	RD	LOC ZONE	FRONT	DEPTH	TOT LND UTS	UNIT TYPE	DT	DPTH FACT	% COND	TOT ADJ	UNIT PRICE	ADJ UNIT PRICE	LAND VALUE	OTHER ADJUSTMENTS AND NOTES	YEAR	DENSITY	DECL	FRZ	YR	CONSRV

REVIEW DATE 06/26/2020 BY KK Total Acres: 0.00 Total Land Value: 0 Market: 0 Agricultural: 0 Common: 0 PRINTED 08/02/2023 BY SYS

ALL OF BLOCKS 197 & 235 & PT
OF BLOCK 211 IN OR 2568/1843 &
PT ABDN R/W PT OR 566/535-38

SREIT VINTAGE AMELIA LLC
C/O STARWOOD CAPITAL GROUP, 591 WEST PUTNAM AVE
GREENWICH, CT 06830

2023

00-00-31-1800-0197-0000

BUILDING CHARACTERISTICS

ELEMENT	CD	CONSTRUCTION
Exterior Wall	10	ABOVE AVG 100
Roof Structur	04	WOOD TRUSS 100
Roof Cover	03	COMP SHNGL 100
Interior Wall	05	DRYWALL 100
Interior Floo	13	LVT/LAMNT 70
Interior Floo	14	CARPET 30
Air Condition	03	CENTRAL 100
Heating Type	04	AIR DUCTED 100
Bedrooms		2 100
Bathrooms		2 100
Frame	02	WOOD FRAME 100
Story Height		10 100
RMS		0 100
Units		24 100
Quality	04	Quality Level 04

DOR CODE 0300 MULTI-FAMILY
MAP NUM | MKT AREA 01
NEIGHBORHOOD/LOC 2002.00

AREA TYPE	TOTAL GROSS AREA	PCT OF BASE	TOT ADJ AREA	SUBAREA MARKET VALUE
BAS	1,551	100	1,551	300,741
BAS	1,551	100	1,551	300,741
BAS	1,551	100	1,551	300,741
BAS	1,551	100	1,551	300,741
BAS	4,563	100	4,563	884,772
BAS	4,563	100	4,563	884,772
CAN	362	30	109	21,136
CAN	362	30	109	21,136
CAN	466	30	140	27,146
CAN	466	30	140	27,146
TOTALS	36,344		32,658	6,332,432

MARKET ADJUSTMENTS

TYPE	MDL	EFF. AREA	TOT ADJ PTS	EFF. BASE RATE	REPL. COST NEW	AYB	EYB	ECON	FNCT		NORM	% COND
0302	03	32,658	109.7250	195.86	6,396,396	2019	2019	0	0	0	1.00	99.00

7 APART/LUX – 0% - 2023 Heated Area: 30660 HX Base Yr

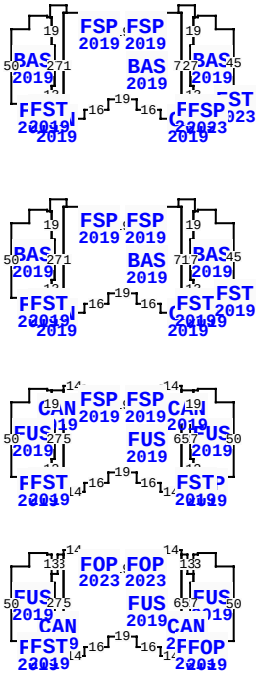

** This building has 46 Sub-Areas

2 VINTAGE WAY, FERNANDINA BEACH

BLD DATE	06/26/2020 KK	LGL DATE	
XF DATE	06/26/2020 KK	LAND DATE	06/26/2020 KK
INC DATE		AG DATE	

NASSAU COUNTY PROPERTY

PAGE 7 of 16 2

VALUATION SUMMARY

VALUATION BY	DIRECT_CAP
Tax Group: 2	Tax Dist:
BUILDING MARKET VALUE	0
TOTAL MARKET OB/XF VALUE	0
TOTAL LAND VALUE - MARKET	0
TOTAL MARKET VALUE	52,977,319
SOH/AGL Deduction	0
ASSESSED VALUE	52,977,319
TOTAL EXEMPTION VALUE	0
BASE TAXABLE VALUE	52,977,319
TOTAL JUST VALUE	52,977,319
NCON VALUE	0
INCOME VALUE	52,977,319
PREVIOUS YEAR MKT VALUE	36,821,372

PERMIT NUM	DESCRIPTION	AMT	ISSUED

SALES DATA

OFF RECORD Number	DATE	TYPE INST	Q / U	V / I	RSN CD	SALE PRICE
2568/1843	6/08/2022	SW	Q	I	01	66,933,000
GRANTOR: VINTAGE AMELIA OWNER						
GRANTEE: SREIT VINTAGE AMELI						
2200/0197	5/31/2018	SW	U	V	30	3,000,000
GRANTOR: TDK LAND LLC						
GRANTEE: VINTAGE AMELIA OWNE						

BUILDING NOTES

BUILDING DIMENSIONS

BAS=[YR=2019;ORIG=-35,9] W2 W12 S6 W4 S7 W12 W19 W12 N7 W4 N6 W12 W2 S71 E2 E12 N6 E16 N7 E19 S7 E16 S6 E12 E2 N71 $
BAS=[YR=2019;ORIG=0,20] W12 N9 W12 S1 W2 W1 S19 W2 S27 E2 S13 E3 E12 N1 E12 N5 N45 $
BAS=[YR=2019;ORIG=-122,12] W1 W2 N1 W12 S9 W12 S50 E12 S1 E12 E3 N13 E2 N27 W2 N19 $
CAN=[YR=2019;ORIG=-26,12] N8 W11 S5 E2 S71 W2 S5 E11 N8 W1 N6 N13 W2 N27 E2 N19 E1 $
CAN=[YR=2019;ORIG=-112,9] N5 W11 S8 E1 S19 E2 S27 W2 S13 S6 W1 S8 E11 N5 W2 N71 E2 $
FST=[YR=2023;ORIG=0,65] E2 S5 W2 N5 $
FST=[YR=2019;ORIG=-27,71] E3 S6 W3 N6 $

EXTRA FEATURES

LN	OB/XF CODE	DESCRIPTION	BLD	CAP	L	W	UNITS	UT	Adj R	ADJ UNIT PRICE	ORIG COND	YEAR ON	YEAR ACTUAL	Q	% COND	OB/XF MKT VALUE	NOTES
61	0810	CONCRETE A	0	0	14	3	42.00	SF	6.50	6.50	100	2019	2019	3	99	270	
62	0463	FENCE GATE	0	0	0	0	4.00	UT	600.00	600.00	100	2019	2019	3	96	2,304	
63	0810	CONCRETE A	0	0	0	0	366.00	SF	6.50	6.50	100	2019	2019	3	99	2,355	
64	0400	CONC CURB	0	0	0	0	29.00	LF	15.00	15.00	100	2019	2019	3	99	431	
65	6002	EL ROLL DR	0	0	0	0	1.00	UT	900.00	900.00	100	2019	2019	3	90	810	
66	1075	TRELLIS G	0	0	36	10	360.00	SF	52.50	52.50	100	2019	2019	3	93	17,577	
67	0966	FIRE SPRNK	0	0	0	0	5,266.00	SF	3.00	3.00	100	2019	2019	3	99	15,640	
68	0966	FIRE SPRNK	0	0	0	0	23,326.00	SF	3.00	3.00	100	2019	2019	3	99	69,278	
69	0966	FIRE SPRNK	0	0	0	0	4,672.00	SF	3.00	3.00	100	2019	2019	3	99	13,876	
70	0966	FIRE SPRNK	0	0	0	0	23,326.00	SF	3.00	3.00	100	2019	2019	3	99	69,278	

TOTAL OB/XF 191,819

LAND DESCRIPTION

LN	USE CODE	CLS	LAND USE DESCRIPTION	CAP	RD	LOC ZONE	FRONT	DEPTH	TOT LND UTS	UNIT TYPE	DT	DPTH FACT	% COND	TOT ADJ	UNIT PRICE	ADJ UNIT PRICE	LAND VALUE	OTHER ADJUSTMENTS AND NOTES	YEAR	DENSITY	DECL	FRZ	YR	CONSRV

REVIEW DATE 06/26/2020 BY KK Total Acres: 0.00 Total Land Value: 0 Market: 0 Agricultural: 0 Common: 0 PRINTED 08/02/2023 BY SYS

ALL OF BLOCKS 197 & 235 & PT
OF BLOCK 211 IN OR 2568/1843 &
PT ABDN R/W PT OR 566/535-38

SREIT VINTAGE AMELIA LLC
C/O STARWOOD CAPITAL GROUP, 591 WEST PUTNAM AVE
GREENWICH, CT 06830

2023

00-00-31-1800-0197-0000

BUILDING CHARACTERISTICS

ELEMENT	CD	CONSTRUCTION
Exterior Wall	10	ABOVE AVG 100
Roof Structur	04	WOOD TRUSS 100
Roof Cover	03	COMP SHNGL 100
Interior Wall	05	DRYWALL 100
Interior Floo	13	LVT/LAMNT 70
Interior Floo	14	CARPET 30
Air Condition	03	CENTRAL 100
Heating Type	04	AIR DUCTED 100
Bedrooms		2 100
Bathrooms		2 100
Frame	02	WOOD FRAME 100
Story Height		10 100
RMS		0 100
Units		24 100
Quality	04	Quality Level 04
DOR CODE	0300	MULTI-FAMILY
MAP NUM		MKT AREA 01
NEIGHBORHOOD/LOC	2002.00	

AREA TYPE	TOTAL GROSS AREA	PCT OF BASE	TOT ADJ AREA	SUBAREA MARKET VALUE
BAS	1,551	100	1,551	300,741
BAS	1,551	100	1,551	300,741
BAS	4,563	100	4,563	884,772
CAN	362	30	109	21,136
CAN	362	30	109	21,136
CAN	466	30	140	27,146
CAN	466	30	140	27,146
CAN	630	30	189	36,648
CAN	630	30	189	36,648
FOP	18	30	5	969
TOTALS	27,037		24,400	4,731,194

MARKET ADJUSTMENTS

TYPE	MDL	EFF. AREA	TOT ADJ PTS	EFF. BASE RATE	REPL. COST NEW	AYB	EYB	ECON	FNCT		NORM	% COND
0302	03	24,400	109.7250	195.86	4,778,984	2019	2019	0	0	0	1.00	99.00

8 APART/LUX – 0% - 2023 Heated Area: 22995 HX Base Yr

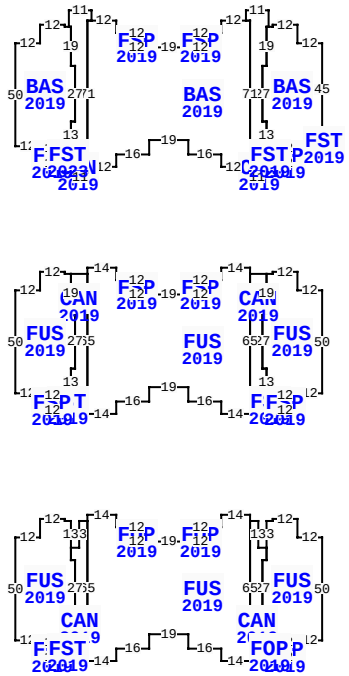

** This building has 34 Sub-Areas

2 VINTAGE WAY, FERNANDINA BEACH

BLD DATE	06/26/2020 KK	LGL DATE	
XF DATE	06/26/2020 KK	LAND DATE	06/26/2020 KK
INC DATE		AG DATE	

NASSAU COUNTY PROPERTY

VALUATION SUMMARY

VALUATION BY	DIRECT_CAP
Tax Group: 2	Tax Dist:
BUILDING MARKET VALUE	0
TOTAL MARKET OB/XF VALUE	0
TOTAL LAND VALUE - MARKET	0
TOTAL MARKET VALUE	52,977,319
SOH/AGL Deduction	0
ASSESSED VALUE	52,977,319
TOTAL EXEMPTION VALUE	0
BASE TAXABLE VALUE	52,977,319
TOTAL JUST VALUE	52,977,319
NCON VALUE	0
INCOME VALUE	52,977,319
PREVIOUS YEAR MKT VALUE	36,821,372

PERMIT NUM	DESCRIPTION	AMT	ISSUED

SALES DATA

OFF RECORD Number	DATE	TYPE INST	Q U	V I	RSN CD	SALE PRICE
2568/1843	6/08/2022	SW	Q	I	01	66,933,000
GRANTOR: VINTAGE AMELIA OWNER						
GRANTEE: SREIT VINTAGE AMELI						
2200/0197	5/31/2018	SW	U	V	30	3,000,000
GRANTOR: TDK LAND LLC						
GRANTEE: VINTAGE AMELIA OWNE						

BUILDING NOTES

BUILDING DIMENSIONS

BAS=[YR=2019;ORIG=0,30] W12 N9 W12 S1 W2 W1 S19 W2 S27 E2 S13 E3 E12 N1 E12 N5 N45 $
CAN=[YR=2019;ORIG=-26,22] N8 W11 S5 E2 S71 W2 S5 E11 N8 W1 N6 N13 W2 N27 E2 N19 E1 $
BAS=[YR=2019;ORIG=-35,19] W2 W12 S6 W4 S7 W12 W19 W12 N7 W4 N6 W12 W2 S71 E2 E12 N6 E16 N7 E19 S7 E16 S6 E12 E2 N71 $
CAN=[YR=2019;ORIG=-112,19] N5 W11 S8 E1 S19 E2 S27 W2 S13 S6 W1 S8 E11 N5 W2 N71 E2 $
BAS=[YR=2019;ORIG=-122,22] W1 W2 N1 W12 S9 W12 S50 E12 S1 E12 E3 N13 E2 N27 W2 N19 $
FSP=[YR=2019;ORIG=-137,81] E12 S7 W12 N7 $
FST=[YR=2023;ORIG=-125,81] E3 S6 W3 N6 $

EXTRA FEATURES

LN	OB/XF CODE	DESCRIPTION	BLD	CAP	L	W	UNITS	UT	Adj R	ADJ UNIT PRICE	ORIG COND	YEAR ON	YEAR ACTUAL	Q	% COND	OB/XF MKT VALUE	NOTES
71	0966	FIRE SPRNK	0	0	0	0	4,672.00	SF	3.00	3.00	100	2019	2019	3	99	13,876	
72	0966	FIRE SPRNK	0	0	0	0	30,012.00	SF	3.00	3.00	100	2019	2019	3	99	89,136	
73	0966	FIRE SPRNK	0	0	0	0	22,850.00	SF	3.00	3.00	100	2019	2019	3	99	67,865	
74	0966	FIRE SPRNK	0	0	0	0	22,850.00	SF	3.00	3.00	100	2019	2019	3	99	67,865	
75	0966	FIRE SPRNK	0	0	0	0	4,672.00	SF	3.00	3.00	100	2019	2019	3	99	13,876	
76	0966	FIRE SPRNK	0	0	0	0	772.00	SF	3.00	3.00	100	2019	2019	3	99	2,293	
77	0350	CARPORT WD	0	0	16	8	128.00	SF	13.00	13.00	100	2019	2019	3	90	1,498	
78	0400	CONC CURB	0	0	0	0	1,194.00	LF	15.00	15.00	100	2019	2019	3	99	17,731	
79	0400	CONC CURB	0	0	0	0	270.00	LF	15.00	15.00	100	2019	2019	3	99	4,010	
80	0803	ASPHALT C	0	0	0	0	33,223.00	SF	2.00	2.00	100	2020	2020	3	88	58,472	

TOTAL OB/XF 336,622

LAND DESCRIPTION

LN	USE CODE	CLS	LAND USE DESCRIPTION	CAP	RD	LOC ZONE	FRONT	DEPTH	TOT LND UTS	UNIT TYPE	DT	DPTH FACT	% COND	TOT ADJ	UNIT PRICE	ADJ UNIT PRICE	LAND VALUE	OTHER ADJUSTMENTS AND NOTES	YEAR	DENSITY	DECL	FRZ	YR	CONSRV

REVIEW DATE 06/26/2020 BY KK Total Acres: 0.00 Total Land Value: 0 Market: 0 Agricultural: 0 Common: 0 PRINTED 08/02/2023 BY SYS

ALL OF BLOCKS 197 & 235 & PT
OF BLOCK 211 IN OR 2568/1843 &
PT ABDN R/W PT OR 566/535-38

SREIT VINTAGE AMELIA LLC
C/O STARWOOD CAPITAL GROUP, 591 WEST PUTNAM AVE
GREENWICH, CT 06830

2023

00-00-31-1800-0197-0000

BUILDING CHARACTERISTICS

ELEMENT	CD	CONSTRUCTION
Exterior Wall	10	ABOVE AVG 100
Roof Structur	04	WOOD TRUSS 100
Roof Cover	03	COMP SHNGL 100
Interior Wall	05	DRYWALL 100
Interior Floo	13	LVT/LAMNT 70
Interior Floo	14	CARPET 30
Air Condition	03	CENTRAL 100
Heating Type	04	AIR DUCTED 100
Bedrooms		2 100
Bathrooms		2 100
Frame	02	WOOD FRAME 100
Story Height		10 100
RMS		0 100
Units		2 100
Quality	04	Quality Level 04

DOR CODE 0300 MULTI-FAMILY
MAP NUM | MKT AREA 01
NEIGHBORHOOD/LOC 2002.00

AREA TYPE	TOTAL GROSS AREA	PCT OF BASE	TOT ADJ AREA	SUBAREA MARKET VALUE
BAS	92	100	92	19,341
BAS	92	100	92	19,341
CAN	45	30	14	2,943
CAN	45	30	14	2,943
FGR	1,760	55	968	203,499
FSP	99	55	54	11,352
FSP	99	55	54	11,352
FST	45	55	25	5,256
FST	473	55	260	54,659
FUS	1,105	100	1,105	232,301
TOTALS	4,960		3,783	795,287

MARKET ADJUSTMENTS

TYPE	MDL	EFF. AREA	TOT ADJ PTS	EFF. BASE RATE	REPL. COST NEW	AYB	EYB	ECON	FNCT		NORM	% COND
0302	03	3,783	118.9650	212.35	803,320	2019	2019	0	0	0	1.00	99.00

9 APART/LUX – 0% - 2023 Heated Area: 2394 HX Base Yr

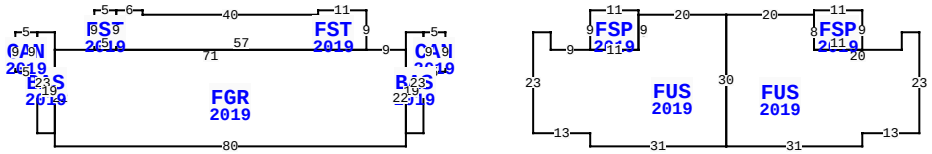

** This building has 11 Sub-Areas
2 VINTAGE WAY, FERNANDINA BEACH

BLD DATE	06/26/2020 KK	LGL DATE	
XF DATE	06/26/2020 KK	LAND DATE	06/26/2020 KK
INC DATE		AG DATE	

NASSAU COUNTY PROPERTY

VALUATION SUMMARY

VALUATION BY	DIRECT_CAP
Tax Group: 2	Tax Dist:
BUILDING MARKET VALUE	0
TOTAL MARKET OB/XF VALUE	0
TOTAL LAND VALUE - MARKET	0
TOTAL MARKET VALUE	52,977,319
SOH/AGL Deduction	0
ASSESSED VALUE	52,977,319
TOTAL EXEMPTION VALUE	0
BASE TAXABLE VALUE	52,977,319
TOTAL JUST VALUE	52,977,319
NCON VALUE	0
INCOME VALUE	52,977,319
PREVIOUS YEAR MKT VALUE	36,821,372

PERMIT NUM	DESCRIPTION	AMT	ISSUED

SALES DATA

OFF RECORD Number	DATE	TYPE INST	Q U	V I	RSN CD	SALE PRICE
2568/1843	6/08/2022	SW	Q	I	01	66,933,000
GRANTOR: VINTAGE AMELIA OWNER						
GRANTEE: SREIT VINTAGE AMELI						
2200/0197	5/31/2018	SW	U	V	30	3,000,000
GRANTOR: TDK LAND LLC						
GRANTEE: VINTAGE AMELIA OWNE						

BUILDING NOTES

BUILDING DIMENSIONS

CAN=[YR=2019] W5 BAS=[YR=2019] W4 S4 FGR=[YR=2019] W9 FST=[YR=2019] N9 W11 S1 W40 N1 W6 FST=[YR=2019] W5 S9 E5 N9 $ S9 E57$ W71 BAS=[YR=2019] N4 W4 CAN=[YR=2019] W5 S9 E5 N9$ S23 E4 N19$ S22 E80 N22$ S19 E4 N23$ S9 E5 N9$ PTR= E20 FUS=[YR=2019] E4 S4 E9 FSP=[YR=2019] N9 E11 S9 W11$ E11 N8 E20 FUS=[YR=2019] E20 FSP=[YR=2019] N1 E11 S9 W11 N8$ S8 E20 N4 E4 S23 W13 S3 W31 N30$ S30 W31 N3 W13 N23$ W20$.

EXTRA FEATURES

LN	OB/XF CODE	DESCRIPTION	BLD	CAP	L	W	UNITS	UT	Adj R	ADJ UNIT PRICE	ORIG COND	YEAR ON	YEAR ACTUAL	Q	% COND	OB/XF MKT VALUE	NOTES
81	0400	CONC CURB	0	0	0	0	2,095.00	LF	15.00	15.00	100	2020	2020	3	99	31,111	
82	0856	POROUS CC	0	0	0	0	31,824.00	SF	2.50	2.50	100	2020	2020	3	99	78,764	
83	0812	CONCRETE C	0	0	0	0	2,745.00	SF	4.00	4.00	100	2020	2020	3	99	10,870	
84	0648	LIGHTS-AV	0	0	0	0	8.00	UT	140.00	140.00	100	2020	2020	3	93	1,042	
85	0649	LIGHTS-GD	0	0	0	0	2.00	SF	225.00	225.00	100	2020	2020	3	93	419	
86	0972	ST LGHT UN	0	0	0	0	13.00	UT	2,530.00	2,530.00	100	2020	2020	3	98	32,232	
87	1075	TRELLIS G	0	0	0	0	395.00	SF	52.50	52.50	100	2020	2020	3	95	19,701	
88	0400	CONC CURB	0	0	0	0	74.00	LF	15.00	15.00	100	2020	2020	3	99	1,099	
89	0812	CONCRETE C	0	0	0	0	11,271.00	SF	4.00	4.00	100	2020	2020	3	99	44,633	
90	0462	ST/AL FNC	0	0	0	0	1,584.00	SF	10.00	10.00	100	2020	2020	3	95	15,048	

TOTAL OB/XF 234,919

LAND DESCRIPTION

LN	USE CODE	CLS	LAND USE DESCRIPTION	CAP	RD	LOC ZONE	FRONT	DEPTH	TOT LND UTS	UNIT TYPE	DT	DPTH FACT	% COND	TOT ADJ	UNIT PRICE	ADJ UNIT PRICE	LAND VALUE	OTHER ADJUSTMENTS AND NOTES	YEAR	DENSITY	DECL	FRZ	YR	CONSRV

REVIEW DATE 06/26/2020 BY KK Total Acres: 0.00 Total Land Value: 0 Market: 0 Agricultural: 0 Common: 0 PRINTED 08/02/2023 BY SYS

ALL OF BLOCKS 197 & 235 & PT
OF BLOCK 211 IN OR 2568/1843 &
PT ABDN R/W PT OR 566/535-38

SREIT VINTAGE AMELIA LLC
C/O STARWOOD CAPITAL GROUP, 591 WEST PUTNAM AVE
GREENWICH, CT 06830

2023

00-00-31-1800-0197-0000

NASSAU COUNTY PROPERTY

BUILDING CHARACTERISTICS

ELEMENT	CD	CONSTRUCTION
Exterior Wall	10	ABOVE AVG 50
Exterior Wall	21	STONE 50
Roof Structur	04	WOOD TRUSS 100
Roof Cover	03	COMP SHNGL 100
Interior Wall	05	DRYWALL 100
Interior Floo	03	CONC FINSH 100
Air Condition	01	NONE 100
Heating Type	01	NONE 100
Bedrooms		0 100
Bathrooms		0 100
Frame	03	MASONRY 100
Story Height		13 100
RMS		1 100
Units		0 100
Quality	04	Quality Level 04
DOR CODE	0300	MULTI-FAMILY
MAP NUM		MKT AREA 01
NEIGHBORHOOD/LOC	2002.00	

AREA TYPE	TOTAL GROSS AREA	PCT OF BASE	TOT ADJ AREA	SUBAREA MARKET VALUE
BAS	238	100	238	8,054
FCP	154	25	38	1,286
PTO	240	5	12	406
STP	144	10	14	474
TOTALS	776		302	10,221

MARKET ADJUSTMENTS

TYPE	MDL	EFF. AREA	TOT ADJ PTS	EFF. BASE RATE	REPL. COST NEW	AYB	EYB	ECON	FNCT		NORM	% COND
0304	03	302	102.2868	34.27	10,350	2019	2019	0	0	0	1.25	98.75

10 APART/GAR – 0% - 2023 Heated Area: 238 HX Base Yr

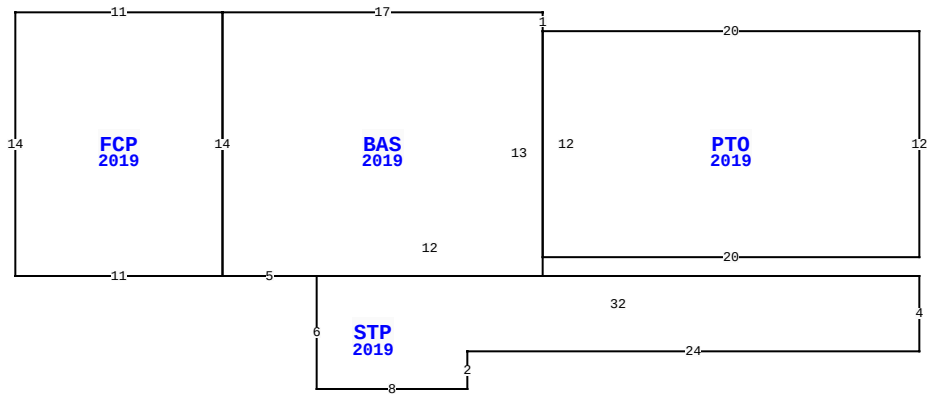

2 VINTAGE WAY, FERNANDINA BEACH

BLD DATE	06/26/2020	KK	LGL DATE		
XF DATE	06/26/2020	KK	LAND DATE	06/26/2020	KK
INC DATE			AG DATE		

VALUATION SUMMARY

VALUATION BY	DIRECT_CAP
Tax Group: 2	Tax Dist:
BUILDING MARKET VALUE	0
TOTAL MARKET OB/XF VALUE	0
TOTAL LAND VALUE - MARKET	0
TOTAL MARKET VALUE	52,977,319
SOH/AGL Deduction	0
ASSESSED VALUE	52,977,319
TOTAL EXEMPTION VALUE	0
BASE TAXABLE VALUE	52,977,319
TOTAL JUST VALUE	52,977,319
NCON VALUE	0
INCOME VALUE	52,977,319
PREVIOUS YEAR MKT VALUE	36,821,372

PERMIT NUM	DESCRIPTION	AMT	ISSUED

SALES DATA

OFF RECORD Number	DATE	TYPE INST	Q / U	V / I	RSN CD	SALE PRICE
2568/1843	6/08/2022	SW	Q	I	01	66,933,000
GRANTOR: VINTAGE AMELIA OWNER						
GRANTEE: SREIT VINTAGE AMELI						
2200/0197	5/31/2018	SW	U	V	30	3,000,000
GRANTOR: TDK LAND LLC						
GRANTEE: VINTAGE AMELIA OWNE						

BUILDING NOTES

BUILDING DIMENSIONS

PTO=[YR=2019] W20 BAS=[YR=2019] N1 W17 FCP=[YR=2019] W11 S14 E11 N14$ S14 E5 STP=[YR=2019] S6 E8 N2 E24 N4 W32$ E12 N13$ S12 E20 N12$.

EXTRA FEATURES

LN	OB/XF CODE	DESCRIPTION	BLD	CAP	L	W	UNITS	UT	Adj R	ADJ UNIT PRICE	ORIG COND	YEAR ON	YEAR ACTUAL	Q	% COND	OB/XF MKT VALUE	NOTES
91	0810	CONCRETE A	0	0	0	0	159.00	SF	6.50	6.50	100	2020	2020	3	99	1,023	
92	0810	CONCRETE A	0	0	15	15	225.00	SF	6.50	6.50	100	2020	2020	3	99	1,448	
93	0810	CONCRETE A	0	0	20	16	320.00	SF	6.50	6.50	100	2020	2020	3	99	2,059	
94	0803	ASPHALT C	0	0	60	30	1,800.00	SF	2.00	2.00	100	2020	2020	3	88	3,168	
95	0425	CL FNC 8'	0	0	0	0	177.00	LF	10.65	10.65	100	2020	2020	3	98	1,847	
96	0463	FENCE GATE	0	0	0	0	1.00	UT	300.00	300.00	100	2020	2020	3	98	294	
97	0424	CL FNC 6'	0	0	0	0	1,254.00	LF	20.00	20.00	100	2020	2020	3	98	24,578	
98	0427	CL FNC 10'	0	0	0	0	394.00	LF	15.54	15.54	100	2020	2020	3	98	5,999	
99	0424	CL FNC 6'	0	0	0	0	489.00	LF	20.00	20.00	100	2020	2020	3	98	9,584	
100	0462	ST/AL FNC	0	0	107	6	642.00	SF	10.00	10.00	100	2020	2020	3	95	6,099	

TOTAL OB/XF 56,099

LAND DESCRIPTION

LN	USE CODE	CLS	LAND USE DESCRIPTION	CAP	RD	LOC ZONE	FRONT	DEPTH	TOT LND UTS	UNIT TYPE	DT	DPTH FACT	% COND	TOT ADJ	UNIT PRICE	ADJ UNIT PRICE	LAND VALUE	OTHER ADJUSTMENTS AND NOTES	YEAR	DENSITY	DECL	FRZ	YR	CONSRV

REVIEW DATE 06/26/2020 BY KK Total Acres: 0.00 Total Land Value: 0 Market: 0 Agricultural: 0 Common: 0 PRINTED 08/02/2023 BY SYS

ALL OF BLOCKS 197 & 235 & PT
OF BLOCK 211 IN OR 2568/1843 &
PT ABDN R/W PT OR 566/535-38

SREIT VINTAGE AMELIA LLC
C/O STARWOOD CAPITAL GROUP, 591 WEST PUTNAM AVE
GREENWICH, CT 06830

2023

00-00-31-1800-0197-0000

NASSAU COUNTY PROPERTY

BUILDING CHARACTERISTICS

ELEMENT	CD	CONSTRUCTION
Exterior Wall	10	ABOVE AVG 100
Roof Structur	04	WOOD TRUSS 100
Roof Cover	03	COMP SHNGL 100
Interior Wall	05	DRYWALL 100
Interior Floo	03	CONC FINSH 70
Interior Floo	11	CLAY TILE 30
Air Condition	03	CENTRAL 100
Heating Type	04	AIR DUCTED 100
Bedrooms		0 100
Bathrooms		0 100
Frame	02	WOOD FRAME 100
Story Height		9 100
RMS		2 100
Units		0 100
Quality	04	Quality Level 04

DOR CODE	0300	MULTI-FAMILY	
MAP NUM		MKT AREA	01
NEIGHBORHOOD/LOC	2002.00		

AREA TYPE	TOTAL GROSS AREA	PCT OF BASE	TOT ADJ AREA	SUBAREA MARKET VALUE
BAS	221	100	221	7,645
BAS	551	100	551	19,059
CAN	100	30	30	1,038
TOTALS	872		802	27,742

MARKET ADJUSTMENTS

TYPE	MDL	EFF. AREA	TOT ADJ PTS	EFF. BASE RATE	REPL. COST NEW	AYB	EYB	ECON	FNCT		NORM	% COND
0304	03	802	104.2965	34.94	28,022	2019	2019	0	0	0	1.00	99.00

11 APARTMENT/GAR – 0% - 2023 Heated Area: 772 HX Base Yr

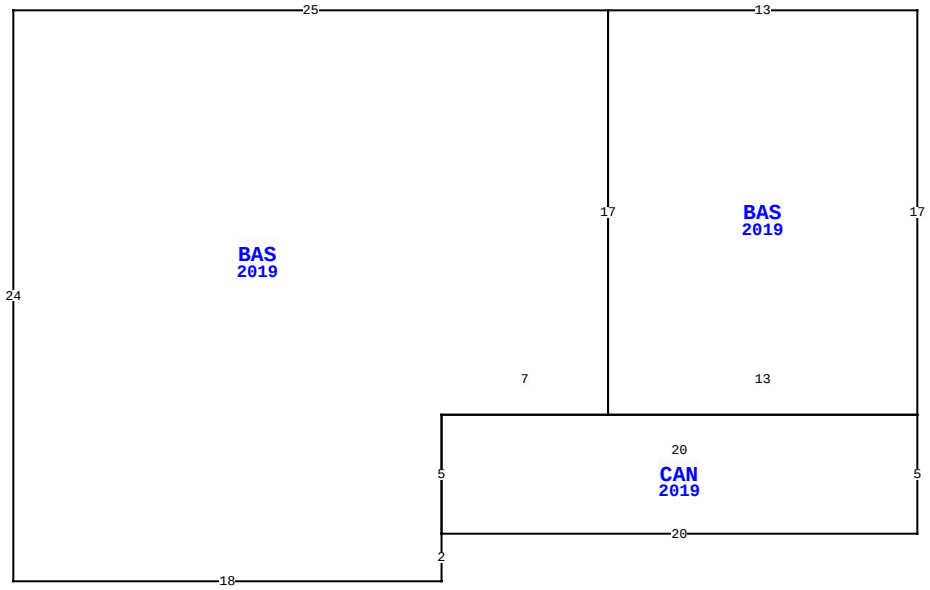

2 VINTAGE WAY, FERNANDINA BEACH

BLD DATE	06/26/2020	KK	LGL DATE	
XF DATE	06/26/2020	KK	LAND DATE	06/26/2020 KK
INC DATE			AG DATE	

VALUATION SUMMARY

VALUATION BY	DIRECT_CAP
Tax Group: 2	Tax Dist:
BUILDING MARKET VALUE	0
TOTAL MARKET OB/XF VALUE	0
TOTAL LAND VALUE - MARKET	0
TOTAL MARKET VALUE	52,977,319
SOH/AGL Deduction	0
ASSESSED VALUE	52,977,319
TOTAL EXEMPTION VALUE	0
BASE TAXABLE VALUE	52,977,319
TOTAL JUST VALUE	52,977,319
NCON VALUE	0
INCOME VALUE	52,977,319
PREVIOUS YEAR MKT VALUE	36,821,372

PERMIT NUM	DESCRIPTION	AMT	ISSUED

SALES DATA

OFF RECORD Number	DATE	TYPE INST	Q / U	V / I	RSN CD	SALE PRICE
2568/1843	6/08/2022	SW	Q	I	01	66,933,000
GRANTOR: VINTAGE AMELIA OWNER						
GRANTEE: SREIT VINTAGE AMELI						
2200/0197	5/31/2018	SW	U	V	30	3,000,000
GRANTOR: TDK LAND LLC						
GRANTEE: VINTAGE AMELIA OWNE						

BUILDING NOTES

BUILDING DIMENSIONS

BAS=[YR=2019] W13 BAS=[YR=2019] W25 S24 E18 N2
CAN=[YR=2019] E20 N5 W20 S5$ N5 E7 N17$ S17 E13 N17$.

EXTRA FEATURES

L N	OB/XF CODE	DESCRIPTION	BLD	CAP	L	W	UNITS	UT	Adj R	ADJ UNIT PRICE	ORIG COND	YEAR ON	YEAR ACTUAL	Q	% COND	OB/XF MKT VALUE	NOTES

LAND DESCRIPTION

TOTAL OB/XF 0

L N	USE CODE	CLS	LAND USE DESCRIPTION	CAP	R D	LOC ZONE	FRONT	DEPTH	TOT LND UTS	UNIT TYPE	D T	DPTH FACT	% COND	TOT ADJ	UNIT PRICE	ADJ UNIT PRICE	LAND VALUE	OTHER ADJUSTMENTS AND NOTES	YEAR	DENSITY	DECL	FRZ	YR	CONSRV

REVIEW DATE 06/26/2020 BY KK Total Acres: 0.00 Total Land Value: 0 Market: 0 Agricultural: 0 Common: 0 PRINTED 08/02/2023 BY SYS

ALL OF BLOCKS 197 & 235 & PT
OF BLOCK 211 IN OR 2568/1843 &
PT ABDN R/W PT OR 566/535-38

SREIT VINTAGE AMELIA LLC
C/O STARWOOD CAPITAL GROUP, 591 WEST PUTNAM AVE
GREENWICH, CT 06830

2023

00-00-31-1800-0197-0000

BUILDING CHARACTERISTICS

ELEMENT	CD	CONSTRUCTION
Exterior Wall	10	ABOVE AVG 100
Roof Structur	04	WOOD TRUSS 100
Roof Cover	03	COMP SHNGL 100
Interior Wall	05	DRYWALL 100
Interior Floo	13	LVT/LAMNT 70
Interior Floo	14	CARPET 30
Air Condition	03	CENTRAL 100
Heating Type	04	AIR DUCTED 100
Bedrooms		2 100
Bathrooms		2 100
Frame	02	WOOD FRAME 100
Story Height		10 100
RMS		0 100
Units		24 100
Quality	04	Quality Level 04
DOR CODE	0300	MULTI-FAMILY
MAP NUM		MKT AREA 01
NEIGHBORHOOD/LOC	2002.00	

AREA TYPE	TOTAL GROSS AREA	PCT OF BASE	TOT ADJ AREA	SUBAREA MARKET VALUE
BAS	2,359	100	2,359	459,724
BAS	2,359	100	2,359	459,724
BAS	3,126	100	3,126	609,197
CAN	362	30	109	21,242
CAN	362	30	109	21,242
CAN	466	30	140	27,283
CAN	466	30	140	27,283
CAN	630	30	189	36,833
CAN	630	30	189	36,833
FOP	18	30	5	974
TOTALS	28,147		25,200	4,910,994

MARKET ADJUSTMENTS

TYPE	MDL	EFF. AREA	TOT ADJ PTS	EFF. BASE RATE	REPL. COST NEW	AYB	EYB	ECON	FNCT		NORM	% COND
0302	03	25,200	109.7250	195.86	4,935,672	2020	2020	0	0	0	0.50	99.50

12 APART/LUX – 0% - 2023 Heated Area: 23527 HX Base Yr

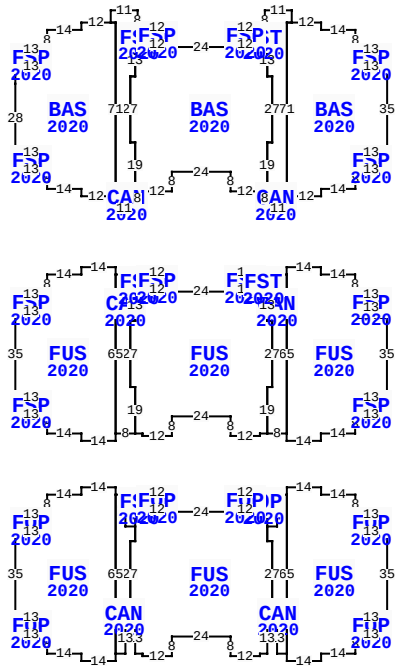

** This building has 39 Sub-Areas

2 VINTAGE WAY, FERNANDINA BEACH

BLD DATE	06/26/2020	KK	LGL DATE	
XF DATE	06/26/2020	KK	LAND DATE	06/26/2020 KK
INC DATE			AG DATE	

NASSAU COUNTY PROPERTY

VALUATION SUMMARY

VALUATION BY	DIRECT_CAP
Tax Group: 2	Tax Dist:
BUILDING MARKET VALUE	0
TOTAL MARKET OB/XF VALUE	0
TOTAL LAND VALUE - MARKET	0
TOTAL MARKET VALUE	52,977,319
SOH/AGL Deduction	0
ASSESSED VALUE	52,977,319
TOTAL EXEMPTION VALUE	0
BASE TAXABLE VALUE	52,977,319
TOTAL JUST VALUE	52,977,319
NCON VALUE	0
INCOME VALUE	52,977,319
PREVIOUS YEAR MKT VALUE	36,821,372

PERMIT NUM	DESCRIPTION	AMT	ISSUED

SALES DATA

OFF RECORD Number	DATE	TYPE INST	Q / U	V / I	RSN CD	SALE PRICE
2568/1843	6/08/2022	SW	Q	I	01	66,933,000
GRANTOR: VINTAGE AMELIA OWNER						
GRANTEE: SREIT VINTAGE AMELI						
2200/0197	5/31/2018	SW	U	V	30	3,000,000
GRANTOR: TDK LAND LLC						
GRANTEE: VINTAGE AMELIA OWNE						

BUILDING NOTES

BUILDING DIMENSIONS

BAS=[YR=2020;ORIG=0,30] W13 N7 N8 W14 N3 W12 W2 S71 E2 E12 N3 E14 N8 N7 E13 N35 $
CAN=[YR=2020;ORIG=-39,12] N5 W11 S8 E1 S6 S13 E2 S27 W2 S19 W1 S8 E11 N5 W2 N71 E2 $
BAS=[YR=2020;ORIG=-47,34] W2 N13 W3 W12 S1 W24 N1 W12 W3 S13 W2 S27 E2 S19 E1 E2 S1 E12 N8 E24 S8 E12 N1 E2 E1 N19 E2 N27 $
CAN=[YR=2020;ORIG=-105,34] E2 N13 N6 E1 N8 W11 S5 E2 S71 W2 S5 E11 N8 W1 N19 W2 N27 $
BAS=[YR=2020;ORIG=-111,12] W2 W12 S3 W14 S8 S7 W13 S2 S5 S28 E13 S7 S8 E14 S3 E12 E2 N71 $
FSP=[YR=2020;ORIG=-13,23] E13 S7 W13 N7 $

EXTRA FEATURES

LN	OB/XF CODE	DESCRIPTION	BLD	CAP	L	W	UNITS	UT	Adj R	ADJ UNIT PRICE	ORIG COND	YEAR ON	YEAR ACTUAL	Q	% COND	OB/XF MKT VALUE	NOTES

LAND DESCRIPTION

TOTAL OB/XF 0

LN	USE CODE	CLS	LAND USE DESCRIPTION	CAP	RD	LOC ZONE	FRONT	DEPTH	TOT LND UTS	UNIT TYPE	DT	DPTH FACT	% COND	TOT ADJ	UNIT PRICE	ADJ UNIT PRICE	LAND VALUE	OTHER ADJUSTMENTS AND NOTES	YEAR	DENSITY	DECL	FRZ	YR	CONSRV

REVIEW DATE 06/26/2020 BY KK Total Acres: 0.00 Total Land Value: 0 Market: 0 Agricultural: 0 Common: 0 PRINTED 08/02/2023 BY SYS

ALL OF BLOCKS 197 & 235 & PT
OF BLOCK 211 IN OR 2568/1843 &
PT ABDN R/W PT OR 566/535-38

SREIT VINTAGE AMELIA LLC
C/O STARWOOD CAPITAL GROUP, 591 WEST PUTNAM AVE
GREENWICH, CT 06830

2023

00-00-31-1800-0197-0000

BUILDING CHARACTERISTICS

ELEMENT	CD	CONSTRUCTION
Exterior Wall	10	ABOVE AVG 100
Roof Structur	04	WOOD TRUSS 100
Roof Cover	03	COMP SHNGL 100
Interior Wall	05	DRYWALL 100
Interior Floo	13	LVT/LAMNT 70
Interior Floo	14	CARPET 30
Air Condition	03	CENTRAL 100
Heating Type	04	AIR DUCTED 100
Bedrooms		2 100
Bathrooms		2 100
Frame	02	WOOD FRAME 100
Story Height		10 100
RMS		0 100
Units		24 100
Quality	04	Quality Level 04

DOR CODE 0300 MULTI-FAMILY
MAP NUM | MKT AREA 01
NEIGHBORHOOD/LOC 2002.00

AREA TYPE	TOTAL GROSS AREA	PCT OF BASE	TOT ADJ AREA	SUBAREA MARKET VALUE
BAS	2,359	100	2,359	459,724
BAS	2,359	100	2,359	459,724
BAS	3,126	100	3,126	609,197
CAN	362	30	109	21,242
CAN	362	30	109	21,242
CAN	466	30	140	27,283
CAN	466	30	140	27,283
CAN	630	30	189	36,833
CAN	630	30	189	36,833
FOP	84	30	25	4,873
TOTALS	28,152		25,210	4,912,943

MARKET ADJUSTMENTS

TYPE	MDL	EFF. AREA	TOT ADJ PTS	EFF. BASE RATE	REPL. COST NEW	AYB	EYB	ECON	FNCT		NORM	% COND
0302	03	25,210	109.7250	195.86	4,937,631	2020	2020	0	0	0	0.50	99.50

13 APART/LUX – 0% - 2023 Heated Area: 23532 HX Base Yr

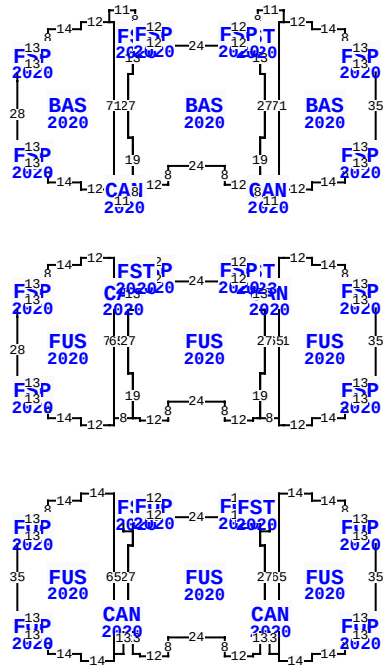

** This building has 39 Sub-Areas

2 VINTAGE WAY, FERNANDINA BEACH

BLD DATE	06/26/2020	KK	LGL DATE		
XF DATE	06/26/2020	KK	LAND DATE	06/26/2020	KK
INC DATE			AG DATE		

NASSAU COUNTY PROPERTY

PAGE 13 of 16 2

VALUATION SUMMARY

VALUATION BY	DIRECT_CAP
Tax Group: 2	Tax Dist:
BUILDING MARKET VALUE	0
TOTAL MARKET OB/XF VALUE	0
TOTAL LAND VALUE - MARKET	0
TOTAL MARKET VALUE	52,977,319
SOH/AGL Deduction	0
ASSESSED VALUE	52,977,319
TOTAL EXEMPTION VALUE	0
BASE TAXABLE VALUE	52,977,319
TOTAL JUST VALUE	52,977,319
NCON VALUE	0
INCOME VALUE	52,977,319
PREVIOUS YEAR MKT VALUE	36,821,372

PERMIT NUM	DESCRIPTION	AMT	ISSUED

SALES DATA

OFF RECORD Number	DATE	TYPE INST	Q / U	V / I	RSN CD	SALE PRICE
2568/1843	6/08/2022	SW	Q	I	01	66,933,000
GRANTOR: VINTAGE AMELIA OWNER						
GRANTEE: SREIT VINTAGE AMELI						
2200/0197	5/31/2018	SW	U	V	30	3,000,000
GRANTOR: TDK LAND LLC						
GRANTEE: VINTAGE AMELIA OWNE						

BUILDING NOTES

BUILDING DIMENSIONS

BAS=[YR=2020;ORIG=0,30] W13 N7 N8 W14 N3 W12 W2 S71 E2 E12 N3 E14 N8 N7 E13 N35 $
CAN=[YR=2020;ORIG=-41,12] E2 N5 W11 S8 E1 S6 S13 E2 S27 W2 S19 W1 S8 E11 N5 W2 N71 $
BAS=[YR=2020;ORIG=-47,34] W2 N13 W3 W12 S1 W24 N1 W12 W3 S13 W2 S27 E2 S19 E1 E2 S1 E12 N8 E24 S8 E12 N1 E2 E1 N19 E2 N27 $
CAN=[YR=2020;ORIG=-105,34] E2 N13 N6 E1 N8 W11 S5 E2 S71 W2 S5 E11 N8 W1 N19 W2 N27 $
BAS=[YR=2020;ORIG=-113,12] E2 S71 W2 W12 N3 W14 N8 N7 W13 N28 N5 N2 E13 N7 N8 E14 N3 E12 $
FSP=[YR=2020;ORIG=-152,23] E13 S7 W13 N7 $

EXTRA FEATURES

LN	OB/XF CODE	DESCRIPTION	BLD	CAP	L	W	UNITS	UT	Adj R	ADJ UNIT PRICE	ORIG COND	YEAR ON	YEAR ACTUAL	Q	% COND	OB/XF MKT VALUE	NOTES

LAND DESCRIPTION

TOTAL OB/XF 0

LN	USE CODE	CLS	LAND USE DESCRIPTION	CAP	RD	LOC ZONE	FRONT	DEPTH	TOT LND UTS	UNIT TYPE	DT	DPTH FACT	% COND	TOT ADJ	UNIT PRICE	ADJ UNIT PRICE	LAND VALUE	OTHER ADJUSTMENTS AND NOTES	YEAR	DENSITY	DECL	FRZ	YR	CONSRV

REVIEW DATE 06/26/2020 BY KK Total Acres: 0.00 Total Land Value: 0 Market: 0 Agricultural: 0 Common: 0 PRINTED 08/02/2023 BY SYS

ALL OF BLOCKS 197 & 235 & PT
OF BLOCK 211 IN OR 2568/1843 &
PT ABDN R/W PT OR 566/535-38

SREIT VINTAGE AMELIA LLC
C/O STARWOOD CAPITAL GROUP, 591 WEST PUTNAM AVE
GREENWICH, CT 06830

2023

00-00-31-1800-0197-0000

BUILDING CHARACTERISTICS

ELEMENT	CD	CONSTRUCTION
Exterior Wall	10	ABOVE AVG 100
Roof Structur	04	WOOD TRUSS 100
Roof Cover	03	COMP SHNGL 100
Interior Wall	05	DRYWALL 100
Interior Floo	13	LVT/LAMNT 70
Interior Floo	14	CARPET 30
Air Condition	03	CENTRAL 100
Heating Type	04	AIR DUCTED 100
Bedrooms		2 100
Bathrooms		2 100
Frame	02	WOOD FRAME 100
Story Height		10 100
RMS		0 100
Units		24 100
Quality	04	Quality Level 04

DOR CODE	0300	MULTI-FAMILY	
MAP NUM		MKT AREA	01
NEIGHBORHOOD/LOC	2002.00		

AREA TYPE	TOTAL GROSS AREA	PCT OF BASE	TOT ADJ AREA	SUBAREA MARKET VALUE
BAS	1,551	100	1,551	302,260
BAS	1,551	100	1,551	302,260
BAS	4,563	100	4,563	889,240
CAN	362	30	109	21,242
CAN	362	30	109	21,242
CAN	466	30	140	27,283
CAN	466	30	140	27,283
CAN	630	30	189	36,833
CAN	630	30	189	36,833
FOP	84	30	25	4,873
TOTALS	27,037		24,405	4,756,063

MARKET ADJUSTMENTS

TYPE	MDL	EFF. AREA	TOT ADJ PTS	EFF. BASE RATE	REPL. COST NEW	AYB	EYB	ECON	FNCT		NORM	% COND
0302	03	24,405	109.7250	195.86	4,779,963	2020	2020	0	0	0	0.50	99.50

14 APART/LUX - 0% - 2023 Heated Area: 22995 HX Base Yr

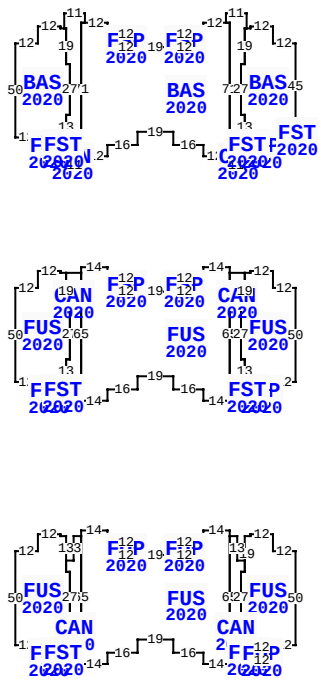

** This building has 34 Sub-Areas

2 VINTAGE WAY, FERNANDINA BEACH

BLD DATE	06/26/2020	KK	LGL DATE	
XF DATE	06/26/2020	KK	LAND DATE	06/26/2020 KK
INC DATE			AG DATE	

NASSAU COUNTY PROPERTY

PAGE 14 of 16 2

VALUATION SUMMARY

VALUATION BY	DIRECT_CAP
Tax Group: 2	Tax Dist:
BUILDING MARKET VALUE	0
TOTAL MARKET OB/XF VALUE	0
TOTAL LAND VALUE - MARKET	0
TOTAL MARKET VALUE	52,977,319
SOH/AGL Deduction	0
ASSESSED VALUE	52,977,319
TOTAL EXEMPTION VALUE	0
BASE TAXABLE VALUE	52,977,319
TOTAL JUST VALUE	52,977,319
NCON VALUE	0
INCOME VALUE	52,977,319
PREVIOUS YEAR MKT VALUE	36,821,372

PERMIT NUM	DESCRIPTION	AMT	ISSUED

SALES DATA

OFF RECORD Number	DATE	TYPE INST	Q / U	V / I	RSN CD	SALE PRICE
2568/1843	6/08/2022	SW	Q	I	01	66,933,000
GRANTOR: VINTAGE AMELIA OWNER						
GRANTEE: SREIT VINTAGE AMELI						
2200/0197	5/31/2018	SW	U	V	30	3,000,000
GRANTOR: TDK LAND LLC						
GRANTEE: VINTAGE AMELIA OWNE						

BUILDING NOTES

BUILDING DIMENSIONS

BAS=[YR=2020;ORIG=-35,19] W2 W12 S6 W4 S7 W12 W19 W12 N7 W4 N6 W12 W2 S71 E2 E12 N6 E16 N7 E19 S7 E16 S6 E12 E2 N71 $
FUS=[YR=2020;ORIG=-35,149] S3 S65 S3 W14 N6 W16 N7 W19 S7 W16 S6 W14 N3 N65 N3 E14 S6 E4 S7 E12 E19 E12 N7 E4 N6 E14 $
BAS=[YR=2020;ORIG=0,30] W12 N9 W12 S1 W2 W1 S19 W2 S27 E2 S13 E3 E12 N1 E12 N5 N45 $
BAS=[YR=2020;ORIG=-122,22] W1 W2 N1 W12 S9 W12 S50 E12 S1 E12 E3 N13 E2 N27 W2 N19 $
FUS=[YR=2020;ORIG=0,160] W12 N9 W12 S1 W3 S19 W2 S27 E2 S13 E3 E12 N1 E12 N50 $
FUS=[YR=2020;ORIG=-122,152] W3 N1 W12 S9 W12 S50 E12 S1 E12 E3 N13 E2 N27 W2 N19 $

EXTRA FEATURES

L N	OB/XF CODE	DESCRIPTION	BLD	CAP	L	W	UNITS	UT	Adj R	ADJ UNIT PRICE	ORIG COND	YEAR ON	YEAR ACTUAL	Q	% COND	OB/XF MKT VALUE	NOTES

LAND DESCRIPTION

TOTAL OB/XF 0

L N	USE CODE	CLS	LAND USE DESCRIPTION	CAP	R D	LOC ZONE	FRONT	DEPTH	TOT LND UTS	UNIT TYPE	D T	DPTH FACT	% COND	TOT ADJ	UNIT PRICE	ADJ UNIT PRICE	LAND VALUE	OTHER ADJUSTMENTS AND NOTES	YEAR	DENSITY	DECL	FRZ	YR	CONSRV

REVIEW DATE 06/26/2020 BY KK Total Acres: 0.00 Total Land Value: 0 Market: 0 Agricultural: 0 Common: 0 PRINTED 08/02/2023 BY SYS

ALL OF BLOCKS 197 & 235 & PT
OF BLOCK 211 IN OR 2568/1843 &
PT ABDN R/W PT OR 566/535-38

SREIT VINTAGE AMELIA LLC
C/O STARWOOD CAPITAL GROUP, 591 WEST PUTNAM AVE
GREENWICH, CT 06830

2023

00-00-31-1800-0197-0000

BUILDING CHARACTERISTICS

ELEMENT	CD	CONSTRUCTION
Exterior Wall	10	ABOVE AVG 100
Roof Structur	04	WOOD TRUSS 100
Roof Cover	03	COMP SHNGL 100
Interior Wall	05	DRYWALL 100
Interior Floo	13	LVT/LAMNT 70
Interior Floo	14	CARPET 30
Air Condition	03	CENTRAL 100
Heating Type	04	AIR DUCTED 100
Bedrooms		2 100
Bathrooms		2 100
Frame	02	WOOD FRAME 100
Story Height		10 100
RMS		0 100
Units		2 100
Quality	04	Quality Level 04

DOR CODE	0300	MULTI-FAMILY	
MAP NUM		MKT AREA	01
NEIGHBORHOOD/LOC	2002.00		

AREA TYPE	TOTAL GROSS AREA	PCT OF BASE	TOT ADJ AREA	SUBAREA MARKET VALUE
BAS	92	100	92	19,438
BAS	92	100	92	19,438
CAN	45	30	14	2,958
CAN	45	30	14	2,958
FGR	1,760	55	968	204,527
FSP	99	55	54	11,410
FSP	99	55	54	11,410
FST	45	55	25	5,282
FST	473	55	260	54,935
FUS	1,105	100	1,105	233,474
TOTALS	4,960		3,783	799,303

MARKET ADJUSTMENTS

TYPE	MDL	EFF. AREA	TOT ADJ PTS	EFF. BASE RATE	REPL. COST NEW	AYB	EYB	ECON	FNCT		NORM	% COND
0302	03	3,783	118.9650	212.35	803,320	2020	2020	0	0	0	0.50	99.50

15 APART/LUX – 0% - 2023 Heated Area: 2394 HX Base Yr

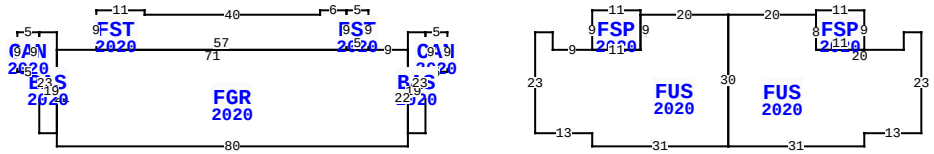

** This building has 11 Sub-Areas

2 VINTAGE WAY, FERNANDINA BEACH

BLD DATE	06/26/2020	KK	LGL DATE	
XF DATE	06/26/2020	KK	LAND DATE	06/26/2020 KK
INC DATE			AG DATE	

NASSAU COUNTY PROPERTY

PAGE 15 of 16 2

VALUATION SUMMARY

VALUATION BY	DIRECT_CAP
Tax Group: 2	Tax Dist:
BUILDING MARKET VALUE	0
TOTAL MARKET OB/XF VALUE	0
TOTAL LAND VALUE - MARKET	0
TOTAL MARKET VALUE	52,977,319
SOH/AGL Deduction	0
ASSESSED VALUE	52,977,319
TOTAL EXEMPTION VALUE	0
BASE TAXABLE VALUE	52,977,319
TOTAL JUST VALUE	52,977,319
NCON VALUE	0
INCOME VALUE	52,977,319
PREVIOUS YEAR MKT VALUE	36,821,372

PERMIT NUM	DESCRIPTION	AMT	ISSUED

SALES DATA

OFF RECORD Number	DATE	TYPE INST	Q / U	V / I	RSN CD	SALE PRICE
2568/1843	6/08/2022	SW	Q	I	01	66,933,000
GRANTOR: VINTAGE AMELIA OWNER						
GRANTEE: SREIT VINTAGE AMELI						
2200/0197	5/31/2018	SW	U	V	30	3,000,000
GRANTOR: TDK LAND LLC						
GRANTEE: VINTAGE AMELIA OWNE						

BUILDING NOTES

BUILDING DIMENSIONS

CAN=[YR=2020] W5 BAS=[YR=2020] W4 S4 FGR=[YR=2020] W9 FST=[YR=2020] N9 W5 FST=[YR=2020] W6 S1 W40 N1 W11 S9 E57 N9$ S9 E5$ W71 BAS=[YR=2020] N4 W4 CAN=[YR=2020] W5 S9 E5 N9$ S23 E4 N19$ S22 E80 N22$ S19 E4 N23$ S9 E5 N9$ PTR= E20 FUS=[YR=2020] E4 S4 E9 FSP=[YR=2020] N9 E11 S9 W11$ E11 N8 E20 FUS=[YR=2020] E20 FSP=[YR=2020] N1 E11 S9 W11 N8$ S8 E20 N4 E4 S23 W13 S3 W31 N30$ S30 W31 N3 W13 N23$ W20$.

EXTRA FEATURES

L N	OB/XF CODE	DESCRIPTION	BLD	CAP	L	W	UNITS	UT	Adj R	ADJ UNIT PRICE	ORIG COND	YEAR ON	YEAR ACTUAL	Q	% COND	OB/XF MKT VALUE	NOTES

LAND DESCRIPTION

TOTAL OB/XF 0

L N	USE CODE	CLS	LAND USE DESCRIPTION	CAP	R D	LOC ZONE	FRONT	DEPTH	TOT LND UTS	UNIT TYPE	D T	DPTH FACT	% COND	TOT ADJ	UNIT PRICE	ADJ UNIT PRICE	LAND VALUE	OTHER ADJUSTMENTS AND NOTES	YEAR	DENSITY	DECL	FRZ	YR	CONSRV

REVIEW DATE 06/26/2020 BY KK Total Acres: 0.00 Total Land Value: 0 Market: 0 Agricultural: 0 Common: 0 PRINTED 08/02/2023 BY SYS

ALL OF BLOCKS 197 & 235 & PT
OF BLOCK 211 IN OR 2568/1843 &
PT ABDN R/W PT OR 566/535-38

SREIT VINTAGE AMELIA LLC
C/O STARWOOD CAPITAL GROUP, 591 WEST PUTNAM AVE
GREENWICH, CT 06830

2023

00-00-31-1800-0197-0000

NASSAU COUNTY PROPERTY

BUILDING CHARACTERISTICS

ELEMENT	CD	CONSTRUCTION
Exterior Wall	10	ABOVE AVG 100
Roof Structur	04	WOOD TRUSS 100
Roof Cover	03	COMP SHNGL 100
Interior Wall	05	DRYWALL 100
Interior Floo	13	LVT/LAMNT 70
Interior Floo	14	CARPET 30
Air Condition	03	CENTRAL 100
Heating Type	04	AIR DUCTED 100
Bedrooms		2 100
Bathrooms		2 100
Frame	02	WOOD FRAME 100
Story Height		10 100
RMS		0 100
Units		24 100
Quality	04	Quality Level 04

DOR CODE	0300	MULTI-FAMILY	
MAP NUM		MKT AREA	01
NEIGHBORHOOD/LOC	2002.00		

AREA TYPE	TOTAL GROSS AREA	PCT OF BASE	TOT ADJ AREA	SUBAREA MARKET VALUE
BAS	1,551	100	1,551	302,260
BAS	1,551	100	1,551	302,260
BAS	4,563	100	4,563	889,240
CAN	362	30	109	21,242
CAN	362	30	109	21,242
CAN	466	30	140	27,283
CAN	466	30	140	27,283
CAN	630	30	189	36,833
CAN	630	30	189	36,833
FOP	84	30	25	4,873
TOTALS	27,037		24,405	4,756,063

MARKET ADJUSTMENTS

TYPE	MDL	EFF. AREA	TOT ADJ PTS	EFF. BASE RATE	REPL. COST NEW	AYB	EYB	ECON	FNCT		NORM	% COND
0302	03	24,405	109.7250	195.86	4,779,963	2020	2020	0	0	0	0.50	99.50

16 APART/LUX - 0% - 2023 Heated Area: 22995 HX Base Yr

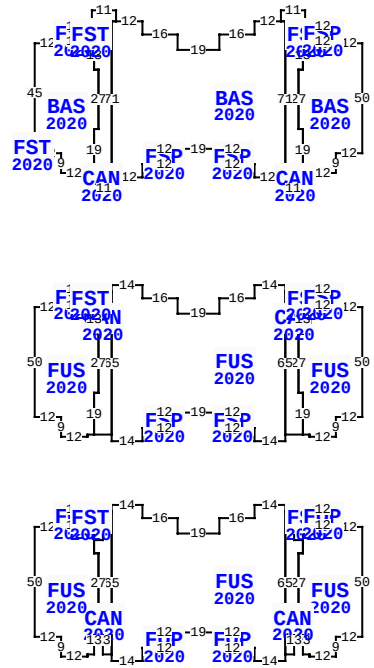

** This building has 34 Sub-Areas

2 VINTAGE WAY, FERNANDINA BEACH

BLD DATE	06/26/2020	KK	LGL DATE		
XF DATE	06/26/2020	KK	LAND DATE	06/26/2020	KK
INC DATE			AG DATE		

NASSAU COUNTY PROPERTY

VALUATION SUMMARY

VALUATION BY	DIRECT_CAP
Tax Group: 2	Tax Dist:
BUILDING MARKET VALUE	0
TOTAL MARKET OB/XF VALUE	0
TOTAL LAND VALUE - MARKET	0
TOTAL MARKET VALUE	52,977,319
SOH/AGL Deduction	0
ASSESSED VALUE	52,977,319
TOTAL EXEMPTION VALUE	0
BASE TAXABLE VALUE	52,977,319
TOTAL JUST VALUE	52,977,319
NCON VALUE	0
INCOME VALUE	52,977,319
PREVIOUS YEAR MKT VALUE	36,821,372

PERMIT NUM	DESCRIPTION	AMT	ISSUED

SALES DATA

OFF RECORD Number	DATE	TYPE INST	Q / U	V / I	RSN CD	SALE PRICE
2568/1843	6/08/2022	SW	Q	I	01	66,933,000
GRANTOR: VINTAGE AMELIA OWNER						
GRANTEE: SREIT VINTAGE AMELI						
2200/0197	5/31/2018	SW	U	V	30	3,000,000
GRANTOR: TDK LAND LLC						
GRANTEE: VINTAGE AMELIA OWNE						

BUILDING NOTES

BUILDING DIMENSIONS

BAS=[YR=2020;ORIG=0,30] W12 N1 W12 W3 S13 W2 S27 E2 S19 E1 E2 S1 E12 N9 E12 N50 $
CAN=[YR=2020;ORIG=-29,42] E2 N13 N6 E1 N8 W11 S5 E2 S71 W2 S5 E11 N8 W1 N19 W2 N27 $
BAS=[YR=2020;ORIG=-35,20] W2 W12 S6 W16 S7 W19 N7 W16 N6 W12 W2 S71 E2 E12 N6 E4 N7 E12 E19 E12 S7 E4 S6 E12 E2 N71 $
CAN=[YR=2020;ORIG=-112,20] N5 W11 S8 E1 S6 S13 E2 S27 W2 S19 W1 S8 E11 N5 W2 N71 E2 $
BAS=[YR=2020;ORIG=-120,42] W2 N13 W3 W12 S1 W12 S45 S5 E12 S9 E12 N1 E2 E1 N19 E2 N27 $
FST=[YR=2020;ORIG=-151,75] E2 S5 W2 N5 $
FSP=[YR=2020;ORIG=-137,22] E12 S7 W12 N7 $

EXTRA FEATURES

LN	OB/XF CODE	DESCRIPTION	BLD	CAP	L	W	UNITS	UT	Adj R	ADJ UNIT PRICE	ORIG COND	YEAR ON	YEAR ACTUAL	Q	% COND	OB/XF MKT VALUE	NOTES

LAND DESCRIPTION

TOTAL OB/XF 0

LN	USE CODE	CLS	LAND USE DESCRIPTION	CAP	RD	LOC ZONE	FRONT	DEPTH	TOT LND UTS	UNIT TYPE	DT	DPTH FACT	% COND	TOT ADJ	UNIT PRICE	ADJ UNIT PRICE	LAND VALUE	OTHER ADJUSTMENTS AND NOTES	YEAR	DENSITY	DECL	FRZ	YR	CONSRV

REVIEW DATE 06/26/2020 BY KK Total Acres: 0.00 Total Land Value: 0 Market: 0 Agricultural: 0 Common: 0 PRINTED 08/02/2023 BY SYS