PT BLK'S 193,200 & PT OF ABND
NECTARINE ST IN OR 2207/1085
CITY OF FDNA BEACH S/D OF

WATSON JOHN P
2943 AMELIA RD
FERNANDINA BEACH, FL 32034

2023

00-00-31-1800-0193-0042

NASSAU COUNTY PROPERTY

BUILDING CHARACTERISTICS

ELEMENT	CD	CONSTRUCTION
Exterior Wall	05	AVERAGE 100
Roof Structur	03	GABLE/HIP 100
Roof Cover	03	COMP SHNGL 100
Interior Wall	04	PLYWOOD 50
Interior Wall	05	DRYWALL 50
Interior Floo	14	CARPET 80
Interior Floo	11	CLAY TILE 20
Air Condition	03	CENTRAL 100
Heating Type	04	AIR DUCTED 100
Bedrooms		3 100
Bathrooms		2 100
Frame	02	WOOD FRAME 100
Stories	1.	1. 100
Units		0 100
BUD8 Adjustme	05	DIST 1A 100
Occupancy	00	NONE 100
Quality	02	Quality Level 02

DOR CODE	0100	SINGLE FAMILY	
MAP NUM		MKT AREA	02
NEIGHBORHOOD/LOC	2017.00		

AREA TYPE	TOTAL GROSS AREA	PCT OF BASE	TOT ADJ AREA	SUBAREA MARKET VALUE
BAS	807	100	807	67,711
BAS	657	100	657	55,125
FOP	80	30	24	2,013
FSP	240	40	96	8,055
STR	20	10	2	167
STR	28	10	3	252
UCP	135	20	27	2,265
TOTALS	1,967		1,616	135,590

MARKET ADJUSTMENTS

TYPE	MDL	EFF. AREA	TOT ADJ PTS	EFF. BASE RATE	REPL. COST NEW	AYB	EYB	ECON	FNCT		NORM	% COND
0100	01	1,616	107.1714	96.72	156,300	1938	1995	0	0	0	13.25	86.75

1 SINGLE FAM – 0% - 0 Heated Area: 1464 HX Base Yr

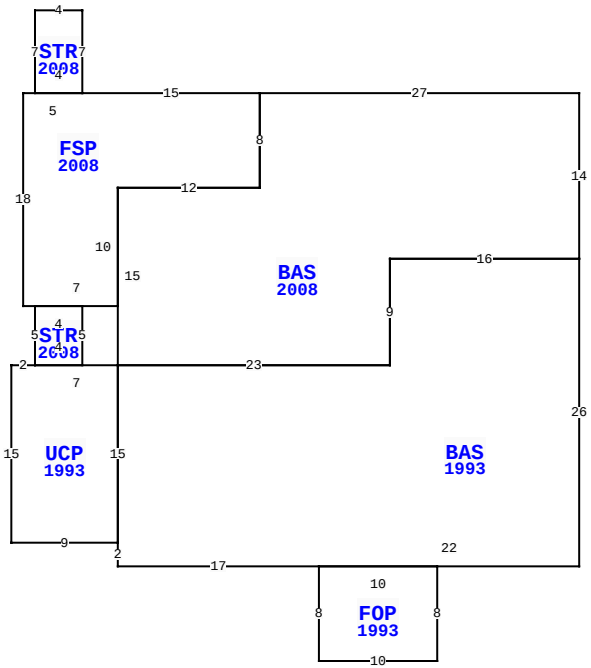

1330 S 6TH ST, FERNANDINA BEACH

BLD DATE		LGL DATE	
XF DATE		LAND DATE	
INC DATE		AG DATE	

VALUATION SUMMARY

VALUATION BY	STANDARD
Tax Group: 8	Tax Dist:
BUILDING MARKET VALUE	135,590
TOTAL MARKET OB/XF VALUE	7,080
TOTAL LAND VALUE - MARKET	72,250
TOTAL MARKET VALUE	214,920
SOH/AGL Deduction	36,752
ASSESSED VALUE	178,168
TOTAL EXEMPTION VALUE	0
BASE TAXABLE VALUE	178,168
TOTAL JUST VALUE	214,920
NCON VALUE	0
INCOME VALUE	
PREVIOUS YEAR MKT VALUE	211,325

PERMIT NUM	DESCRIPTION	AMT	ISSUED
M13685	H/AC	0	03/01/2008
B20993	ADDITION	68,000	01/01/2008
R991634	REPAIR/RRF	0	03/09/1999
8251	CARPORT	5,500	07/21/1992

SALES DATA

OFF RECORD Number	DATE	TYPE INST	Q / U	V / I	RSN CD	SALE PRICE
2207/1085	6/25/2018	WD	U	I	38	105,000
GRANTOR: THRIFT BARBARA SUE						
GRANTEE: WATSON JOHN P						
1730/0933	3/23/2011	QC	U	I	18	85,000
GRANTOR: MELVIN KENNETH J SR L						
GRANTEE: THRIFT BARBARA SUE						

BUILDING NOTES

BUILDING DIMENSIONS

BAS=[YR=2008] W27 FSP=[YR=2008] W15 STR=[YR=2008] N7W4S7E4$
W5 S18 E1 STR=[YR=2008] S5 UCP=[YR=1993] W2S15E9
BAS=[YR=1993] S2E17 FOP=[YR=1993] S8E10N8 W10$
E22N26W16S9W23S15$ N15W7$ E4N5W4$ E7N10E12N8$ S8W12S15
E23N9E16N14$.

EXTRA FEATURES

LN	OB/XF CODE	DESCRIPTION	BLD	CAP	L	W	UNITS	UT	Adj R	ADJ UNIT PRICE	ORIG COND	YEAR ON	YEAR ACTUAL	Q	% COND	OB/XF MKT VALUE	NOTES
1	0810	CONCRETE A	0	0	32	10	320.00	SF	6.50	6.50	100	1992	1992	3	66	1,373	
2	0810	CONCRETE A	0	0	17	3	51.00	SF	6.50	6.50	100	1992	1992	3	66	219	
3	0510	GARAGE WD-	0	0	14	20	280.00	SF	35.00	35.00	100	2008	2008	3	56	5,488	

LAND DESCRIPTION

TOTAL OB/XF 7,080

LN	USE CODE	CLS	LAND USE DESCRIPTION	CAP	RD	LOC ZONE	FRONT	DEPTH	TOT LND UTS	UNIT TYPE	DT	DPTH FACT	% COND	TOT ADJ	UNIT PRICE	ADJ UNIT PRICE	LAND VALUE	OTHER ADJUSTMENTS AND NOTES	YEAR	DENSITY	DECL	FRZ	YR	CONSRV
1	000100	C	SFR	0	0006		85.00	100.00	85.00	FF		1.00	1.00	1.00	850.00	850.00	72,250							

REVIEW DATE 02/03/2017 BY DJ Total Acres: 0.00 Total Land Value: 72,250 Market: 0 Agricultural: 0 Common: 72,250 PRINTED 08/02/2023 BY SYS