BLOCK 180 LOT 1
IN OR 1829/1753
CITY OF FDNA BEACH

MIRSCHEL ARLENE L
506 DATE STREET
FERNANDINA BEACH, FL 32034

2023

00-00-31-1800-0180-0011

BUILDING CHARACTERISTICS

ELEMENT	CD	CONSTRUCTION
Exterior Wall	15	CONC BLOCK 80
Exterior Wall	05	AVERAGE 20
Roof Structur	04	WOOD TRUSS 100
Roof Cover	04	BUILT-UP 60
Roof Cover	03	COMP SHNGL 40
Interior Wall	04	PLYWOOD 80
Interior Wall	05	DRYWALL 20
Interior Floo	03	CONC FINSH 60
Interior Floo	14	CARPET 40
Ceiling	03	PART.FIN. 100
Air Condition	03	CENTRAL 100
Heating Type	04	AIR DUCTED 100
Fixtures		10 100
Frame	03	MASONRY 100
Story Height		10 100
RMS		13 100
Stories	2.	2. 100
Units		0 100
QualityAdjustme	02	QUALITY LEVEL 03

DOR CODE	1200	STORE/OFFICE/RESID	
MAP NUM		MKT AREA	01
NEIGHBORHOOD/LOC	1095.00		

AREA TYPE	TOTAL GROSS AREA	PCT OF BASE	TOT ADJ AREA	SUBAREA MARKET VALUE
APT	1,405	100	1,405	88,557
BAS	3,814	100	3,814	240,397
CAN	96	30	29	1,828
TOTALS	5,315		5,248	330,782

MARKET ADJUSTMENTS

TYPE	MDL	EFF. AREA	TOT ADJ PTS	EFF. BASE RATE	REPL. COST NEW	AYB	EYB	ECON	FNCT		NORM	% COND
1101	04	5,248	86.0472	126.06	661,563	1956	1981	0	0	0	50.00	50.00

1 RETAILSTOR – 0% - 0 Heated Area: 5219 HX Base Yr

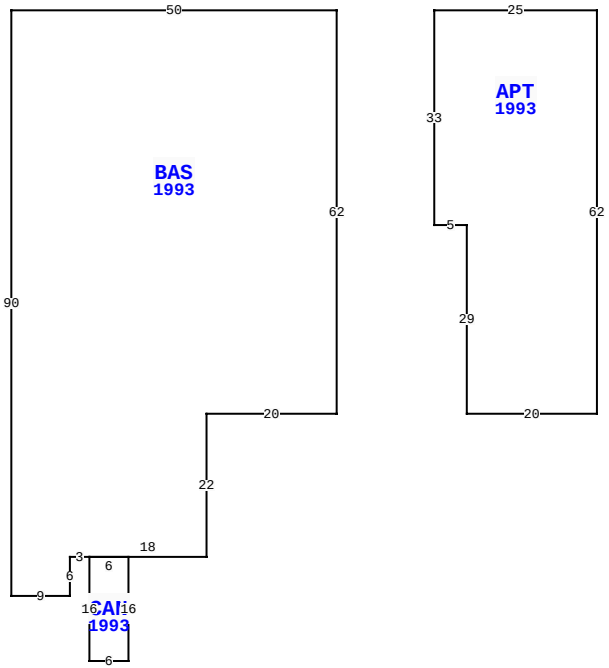

1104 S 8TH ST, FERNANDINA BEACH

BLD DATE	12/04/2018	KK	LGL DATE	
XF DATE	12/04/2018	KK	LAND DATE	12/04/2018 KK
INC DATE			AG DATE	

NASSAU COUNTY PROPERTY

PAGE 1 of 1 2

VALUATION SUMMARY

VALUATION BY	STANDARD
Tax Group: 2	Tax Dist:
BUILDING MARKET VALUE	330,782
TOTAL MARKET OB/XF VALUE	8,107
TOTAL LAND VALUE - MARKET	110,000
TOTAL MARKET VALUE	448,889
SOH/AGL Deduction	114,777
ASSESSED VALUE	334,112
TOTAL EXEMPTION VALUE	0
BASE TAXABLE VALUE	334,112
TOTAL JUST VALUE	448,889
NCON VALUE	0
INCOME VALUE	
PREVIOUS YEAR MKT VALUE	327,220

PERMIT NUM	DESCRIPTION	AMT	ISSUED
20051581	FOUNDATION	1,000	04/14/2005
20051083	REMODEL	1,000	01/20/2005
20042362	MECH OTHER	3,000	12/14/2004
20042266	SIGN	700	12/06/2004
20042249	REMODEL	1,000	12/02/2004
20041969	REMODEL	1,000	10/25/2004

SALES DATA

OFF RECORD Number	DATE	TYPE INST	Q / U	V / I	RSN CD	SALE PRICE
1829/1753	11/30/2012	WD	Q	I	01	290,000
GRANTOR: LEEPER WILLIAM H & EM						
GRANTEE: MIRSCHEL ARLENE L						
1800/0164	4/01/2012	WD	U	I	11	100
GRANTOR: LEEPO INC						
GRANTEE: LEEPER WILLIAM H &						

BUILDING NOTES

BUILDING DIMENSIONS

BAS=[YR=1993] W50 S90 E9 N6 E3 CAN=[YR=1993] S16 E6 N16 W6$ E18 N22 E20 N62$ PTR=E15 APT=[YR=1993] E25 S62 W20 N29 W5 N33$ W15$.

EXTRA FEATURES

LN	OB/XF CODE	DESCRIPTION	BLD	CAP	L	W	UNITS	UT	Adj R	ADJ UNIT PRICE	ORIG COND	YEAR ON	YEAR ACTUAL	Q	% COND	OB/XF MKT VALUE	NOTES
1	0811	CONCRETE B	0	0	38	19	722.00	SF	5.20	5.20	100	1970	1970	3	22	826	
3	0810	CONCRETE A	0	0	9	17	153.00	SF	6.50	6.50	100	2004	2004	3	86	855	
4	1241	WD DECK G	0	0	0	0	146.00	UT	23.00	23.00	100	2004	2004	3	40	1,343	
5	0441	STK FNC 4'	0	0	0	0	82.00	LF	6.50	6.50	100	2004	2004	3	24	128	
6	0978	SECURTY LT	0	0	0	0	1.00	UT	450.00	450.00	100	1995	1995	3	40	180	
7	0978	SECURTY LT	0	0	0	0	1.00	UT	225.00	225.00	100	2004	2004	3	66	149	
8	0402	CONC BUMPE	0	0	0	0	1.00	UT	25.00	25.00	100	2004	2004	3	89	22	
9	0803	ASPHALT C	0	0	84	44	3,696.00	SF	2.00	2.00	100	2004	2004	3	56	4,140	
10	0855	CONC PAVER	0	0	12	4	48.00	SF	10.00	10.00	100	2000	2000	3	80	384	
11	6001	ROLLUP DR	0	0	0	0	1.00	UT	400.00	400.00	100	2000	2000	3	20	80	

TOTAL OB/XF 8,107

LAND DESCRIPTION

LN	USE CODE	CLS	LAND USE DESCRIPTION	CAP	RD	LOC ZONE	FRONT	DEPTH	TOT LND UTS	UNIT TYPE	DT	DPTH FACT	% COND	TOT ADJ	UNIT PRICE	ADJ UNIT PRICE	LAND VALUE	OTHER ADJUSTMENTS AND NOTES	YEAR	DENSITY	DECL	FRZ	YR	CONSRV
1	001200	C	STORE COMB	0	0003	C-2	50.00	100.00	10,000.00	SF		1.00	1.00	1.00	11.00	11.00	110,000							

REVIEW DATE 12/04/2018 BY KK Total Acres: 0.00 Total Land Value: 110,000 Market: 0 Agricultural: 0 Common: 110,000 PRINTED 08/02/2023 BY SYS