BLOCK 148 LOTS 2 3 4 5 & 6
IN OR 2538/647
CITY OF FDNA BEACH

MOCAMA HOLDINGS LLC
629 S 8TH ST
FERNANDINA BEACH, FL 32034

2023

00-00-31-1800-0148-0020

NASSAU COUNTY PROPERTY

BUILDING CHARACTERISTICS

ELEMENT	CD	CONSTRUCTION
Exterior Wall	19	COMMON BRK 60
Exterior Wall	25	MOD METAL 40
Roof Structur	09	RIDGE FRME 100
Roof Cover	04	BUILT-UP 50
Roof Cover	12	MODULAR MT 50
Interior Wall	05	DRYWALL 70
Interior Wall	08	DECORATIVE 30
Interior Floo	03	CONC FINSH 60
Interior Floo	13	LVT/LAMNT 40
Ceiling	03	PART.FIN. 100
Air Condition	04	ROOF TOP 100
Heating Type	04	AIR DUCTED 100
Fixtures		38 100
Frame	03	MASONRY 100
Story Height		15 100
RMS		16 100
Stories	1.5	1.5 100
Units		0 100
Quality Adjustme	02	Quality Level 02

DOR CODE	2100	RESTAURANTS/CAFE	
MAP NUM		MKT AREA	01
NEIGHBORHOOD/LOC	1095.00		

AREA TYPE	TOTAL GROSS AREA	PCT OF BASE	TOT ADJ AREA	SUBAREA MARKET VALUE
AOF	160	100	160	2,543
BAS	6,885	100	6,885	109,410
CAN	34	30	10	159
CAN	84	30	25	397
CAN	90	30	27	429
CAN	189	30	57	906
CAN	276	30	83	1,319
CAN	324	30	97	1,541
FUS	1,269	100	1,269	20,166
GOF	7,465	110	8,212	130,497
TOTALS	18,645		18,271	290,344

MARKET ADJUSTMENTS

TYPE	MDL	EFF. AREA	TOT ADJ PTS	EFF. BASE RATE	REPL. COST NEW	AYB	EYB	ECON	FNCT	AP	NORM	% COND
2101	04	18,271	89.6553	158.91	2,903,445	1954	1980	0	0	25	65.00	10.00

1 RSTARANT 1 - 0% - 2023 Heated Area: 17218 HX Base Yr

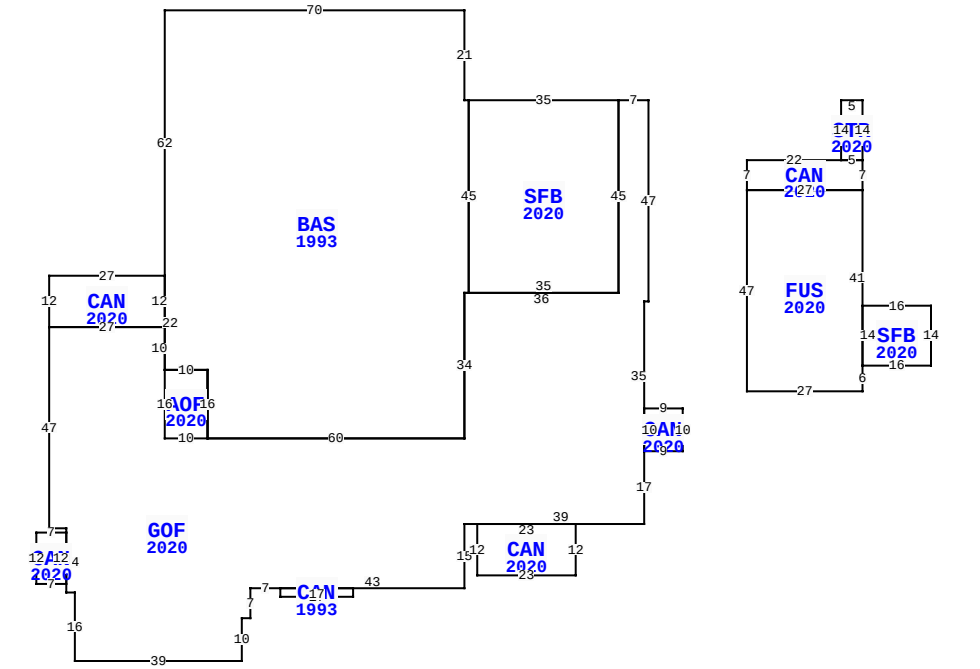

** This building has 13 Sub-Areas

629 S 8TH ST, FERNANDINA BEACH

BLD DATE	05/21/2021	KK	LGL DATE	
XF DATE	05/21/2021	KK	LAND DATE	05/21/2021 KK
INC DATE			AG DATE	

VALUATION SUMMARY

VALUATION BY	STANDARD
Tax Group: 2	Tax Dist:
BUILDING MARKET VALUE	290,344
TOTAL MARKET OB/XF VALUE	6,009
TOTAL LAND VALUE - MARKET	1,350,000
TOTAL MARKET VALUE	1,646,353
SOH/AGL Deduction	0
ASSESSED VALUE	1,646,353
TOTAL EXEMPTION VALUE	0
BASE TAXABLE VALUE	1,646,353
TOTAL JUST VALUE	1,646,353
NCON VALUE	0
INCOME VALUE	
PREVIOUS YEAR MKT VALUE	1,595,424

PERMIT NUM	DESCRIPTION	AMT	ISSUED
20190039	ROOF	85,000	10/31/2019
20183774	OTHER-SITE	300,000	11/02/2018
20183798	REMODEL	2,000,000	11/02/2018
20183289	INTERIOR DEMO	39,500	09/19/2018
20170639	BLD OUT-P5 SURFBO	1,000	03/06/2017
20161756	XFOB - FENCE	0	06/27/2016

SALES DATA

OFF RECORD Number	DATE	TYPE INST	Q / U	V / I	RSN CD	SALE PRICE
2538/0647	2/10/2022	WD	Q	I	01	1,810,600
GRANTOR: SUPER SILLY MONKEY LL						
GRANTEE: MOCAMA HOLDINGS LLC						
2153/0949	6/21/2017	WD	U	I	11	100
GRANTOR: 629 SOUTH 8TH STREET						
GRANTEE: SUPER SILLY MONKEY						

BUILDING NOTES

BUILDING DIMENSIONS

GOF=[YR=2020] W7 SFB=[YR=2020] W35 BAS=[YR=1993] W1 N21 W70 S62 CAN=[YR=2020] W27 S12 E27 N12$ S22 AOF=[YR=2020] S16 E10 N16 W10$ E10 S16 E60 N34 E1 N45$ S45 E35 N45$ S45 W36 S34 W60 N16 W10 N10 W27 S47 E4 S1 CAN=[YR=2020] W7 S12 E7 N12$ S14 E2 S16 E39 N10 E2 N7 E7 CAN=[YR=1993] S2 E17 N2 W17$ E43 N15 E3 CAN=[YR=2020] S12 E23 N12 W23$ E39 N17 CAN=[YR=2020] E9 N10 W9 S10$ N35 E1 N47$ PTR= E50 STR=[YR=2020] W5 S14 CAN=[YR=2020] W22 S7 FUS=[YR=2020] S47 E27 N6 SFB=[YR=2020] E16 N14 W16 S14$ N41 W27$ E27 N7 W5$ E5 N14$ W50$.

EXTRA FEATURES

LN	OB/XF CODE	DESCRIPTION	BLD	CAP	L	W	UNITS	UT	Adj R	ADJ UNIT PRICE	ORIG COND	YEAR ON	YEAR ACTUAL	Q	% COND	OB/XF MKT VALUE	NOTES
7	0803	ASPHALT C	0	0	0	0	2,672.00	SF	2.00	2.00	1	2000	2000	3	1	53	
20	0812	CONCRETE C	0	0	0	0	1,800.00	SF	2.00	2.00	1	1990	1990	3	1	36	
25	0090	AUTO DOOR	0	0	0	0	1.00	UT	1,875.00	1,875.00	1	2009	2009	3	1	19	
26	0825	BRICK	0	0	6	6	36.00	SF	25.00	25.00	1	2014	2014	3	1	9	
27	0812	CONCRETE C	0	0	0	0	1,739.00	SF	4.00	4.00	100	1990	1990	3	62	4,313	
28	0811	CONCRETE B	0	0	0	0	537.00	SF	5.20	5.20	1	1990	1990	3	1	28	
29	0648	LIGHTS-AV	0	0	0	0	4.00	UT	140.00	140.00	1	2020	2020	3	1	6	
30	0855	CONC PAVER	0	0	0	0	5,325.00	SF	7.00	7.00	1	2020	2020	3	1	373	
31	0810	CONCRETE A	0	0	0	0	375.00	SF	6.50	6.50	1	2020	2020	3	1	24	
32	0402	CONC BUMPE	0	0	0	0	30.00	UT	25.00	25.00	1	2020	2020	3	1	8	

TOTAL OB/XF 4,869

LAND DESCRIPTION

LN	USE CODE	CLS	LAND USE DESCRIPTION	CAP	RD	LOC ZONE	FRONT	DEPTH	TOT LND UTS	UNIT TYPE	DT	DPTH FACT	% COND	TOT ADJ	UNIT PRICE	ADJ UNIT PRICE	LAND VALUE	OTHER ADJUSTMENTS AND NOTES	YEAR	DENSITY	DECL	FRZ	YR	CONSRV
1	002100	C	RESTAURANT	0	0003	MU-8	200.00	200.00	20,000.00	SF		1.00	1.00	0.85	30.00	25.50	510,000							
2	002100	C	RESTAURANT	0		MU-8	0.00	0.00	30,000.00	SF		1.00	1.00	0.70	40.00	28.00	840,000							

REVIEW DATE 03/28/2022 BY DCA Total Acres: 0.00 Total Land Value: 1,350,000 Market: 0 Agricultural: 0 Common: 1,350,000 PRINTED 08/02/2023 BY SYS

BLOCK 148 LOTS 2 3 4 5 & 6
IN OR 2538/647
CITY OF FDNA BEACH

MOCAMA HOLDINGS LLC
629 S 8TH ST
FERNANDINA BEACH, FL 32034

2023

00-00-31-1800-0148-0020

BUILDING CHARACTERISTICS

ELEMENT	CD	CONSTRUCTION

DOR CODE	2100	RESTAURANTS/CAFE	
MAP NUM		MKT AREA	01
NEIGHBORHOOD/LOC	1095.00		

AREA TYPE	TOTAL GROSS AREA	PCT OF BASE	TOT ADJ AREA	SUBAREA MARKET VALUE
TOTALS				

MARKET ADJUSTMENTS

TYPE	MDL	EFF. AREA	TOT ADJ PTS	EFF. BASE RATE	REPL. COST NEW	AYB	EYB	ECON	FNCT		NORM	% COND

BLD DATE	05/21/2021	KK	LGL DATE
XF DATE	05/21/2021	KK	LAND DATE 05/21/2021 KK
INC DATE			AG DATE

NASSAU COUNTY PROPERTY

PAGE 2 of 3 2

VALUATION SUMMARY

VALUATION BY	STANDARD
Tax Group: 2	Tax Dist:
BUILDING MARKET VALUE	290,344
TOTAL MARKET OB/XF VALUE	6,009
TOTAL LAND VALUE - MARKET	1,350,000
TOTAL MARKET VALUE	1,646,353
SOH/AGL Deduction	0
ASSESSED VALUE	1,646,353
TOTAL EXEMPTION VALUE	0
BASE TAXABLE VALUE	1,646,353
TOTAL JUST VALUE	1,646,353
NCON VALUE	0
INCOME VALUE	
PREVIOUS YEAR MKT VALUE	1,595,424

PERMIT NUM	DESCRIPTION	AMT	ISSUED
20161275	SIGN - GRAY & ASS	1,470	05/03/2016
20161089	BUILDING A WALL	2,500	04/20/2016
20091107	SIGN	1,200	08/24/2009
20091108	ELEC OTHER	150	08/24/2009
20041103	H/AC	2,000	06/16/2004
20033768	SIGN	465	09/03/2003

SALES DATA

OFF RECORD Number	DATE	TYPE INST	Q U /	V I /	RSN CD	SALE PRICE
2538/0647	2/10/2022	WD	Q	I	01	1,810,600
GRANTOR: SUPER SILLY MONKEY LL						
GRANTEE: MOCAMA HOLDINGS LLC						
2153/0949	6/21/2017	WD	U	I	11	100
GRANTOR: 629 SOUTH 8TH STREET						
GRANTEE: SUPER SILLY MONKEY						

BUILDING NOTES

BUILDING DIMENSIONS

EXTRA FEATURES

LN	OB/XF CODE	DESCRIPTION	BLD	CAP	L	W	UNITS	UT	Adj R	ADJ UNIT PRICE	ORIG COND	YEAR ON	YEAR ACTUAL	Q	% COND	OB/XF MKT VALUE	NOTES
33	0400	CONC CURB	0	0	0	0	151.00	LF	15.00	15.00	1	2020	2020	3	1	23	
34	0810	CONCRETE A	0	0	25	5	125.00	SF	6.50	6.50	1	2020	2020	3	1	8	
35	0812	CONCRETE C	0	0	0	0	3,265.00	SF	4.00	4.00	1	2020	2020	3	1	131	
36	0812	CONCRETE C	0	0	0	0	1,016.00	SF	4.00	4.00	1	2020	2020	3	1	41	
37	0810	CONCRETE A	0	0	6	5	30.00	SF	6.50	6.50	1	2020	2020	3	1	2	
38	0810	CONCRETE A	0	0	16	10	160.00	SF	6.50	6.50	1	2020	2020	3	1	10	
39	0810	CONCRETE A	0	0	0	0	320.00	SF	6.50	6.50	1	2020	2020	3	1	21	
40	0811	CONCRETE B	0	0	0	0	786.00	SF	5.20	5.20	1	2020	2020	3	1	41	
41	0811	CONCRETE B	0	0	0	0	732.00	SF	5.20	5.20	1	2020	2020	3	1	38	
42	0142	BAR TOP A	0	0	0	0	45.00	LF	165.00	165.00	1	2020	2020	3	1	74	

TOTAL OB/XF 389

LAND DESCRIPTION

LN	USE CODE	CLS	LAND USE DESCRIPTION	CAP	RD	LOC ZONE	FRONT	DEPTH	TOT LND UTS	UNIT TYPE	DT	DPTH FACT	% COND	TOT ADJ	UNIT PRICE	ADJ UNIT PRICE	LAND VALUE	OTHER ADJUSTMENTS AND NOTES	YEAR	DENSITY	DECL	FRZ	YR	CONSRV

REVIEW DATE 03/28/2022 BY DCA Total Acres: 0.00 Total Land Value: 1,350,000 Market: 0 Agricultural: 0 Common: 1,350,000 PRINTED 08/02/2023 BY SYS

BLOCK 148 LOTS 2 3 4 5 & 6
IN OR 2538/647
CITY OF FDNA BEACH

MOCAMA HOLDINGS LLC
629 S 8TH ST
FERNANDINA BEACH, FL 32034

2023

00-00-31-1800-0148-0020

NASSAU COUNTY PROPERTY

BUILDING CHARACTERISTICS

ELEMENT	CD	CONSTRUCTION

DOR CODE	2100	RESTAURANTS/CAFE	
MAP NUM		MKT AREA	01
NEIGHBORHOOD/LOC	1095.00		

AREA TYPE	TOTAL GROSS AREA	PCT OF BASE	TOT ADJ AREA	SUBAREA MARKET VALUE
TOTALS				

MARKET ADJUSTMENTS

TYPE	MDL	EFF. AREA	TOT ADJ PTS	EFF. BASE RATE	REPL. COST NEW	AYB	EYB	ECON	FNCT		NORM	% COND

VALUATION SUMMARY

VALUATION BY	STANDARD
Tax Group: 2	Tax Dist:
BUILDING MARKET VALUE	290,344
TOTAL MARKET OB/XF VALUE	6,009
TOTAL LAND VALUE - MARKET	1,350,000
TOTAL MARKET VALUE	1,646,353
SOH/AGL Deduction	0
ASSESSED VALUE	1,646,353
TOTAL EXEMPTION VALUE	0
BASE TAXABLE VALUE	1,646,353
TOTAL JUST VALUE	1,646,353
NCON VALUE	0
INCOME VALUE	
PREVIOUS YEAR MKT VALUE	1,595,424

PERMIT NUM	DESCRIPTION	AMT	ISSUED
20033769	SIGN	465	09/03/2003
2002919	XFOB	1,500	05/11/2000
991763	FOUNDATION	25,000	12/09/1999
9710304	REPAIR/RRF	11,000	02/12/1997
7440	REPAIR/RRF	1,850	11/30/1992

SALES DATA

OFF RECORD Number	DATE	TYPE INST	Q U /	V I /	RSN CD	SALE PRICE
2538/0647	2/10/2022	WD	Q	I	01	1,810,600
GRANTOR: SUPER SILLY MONKEY LL						
GRANTEE: MOCAMA HOLDINGS LLC						
2153/0949	6/21/2017	WD	U	I	11	100
GRANTOR: 629 SOUTH 8TH STREET						
GRANTEE: SUPER SILLY MONKEY						

BLD DATE	05/21/2021	KK	LGL DATE	
XF DATE	05/21/2021	KK	LAND DATE	05/21/2021 KK
INC DATE			AG DATE	

BUILDING NOTES

BUILDING DIMENSIONS

EXTRA FEATURES

LN	OB/XF CODE	DESCRIPTION	BLD	CAP	L	W	UNITS	UT	Adj R	ADJ UNIT PRICE	ORIG COND	YEAR ON	YEAR ACTUAL	Q	% COND	OB/XF MKT VALUE	NOTES
43	0142	BAR TOP A	0	0	0	0	14.00	LF	165.00	165.00	1	2020	2020	3	1	23	
44	0418	EXHST FAN	0	0	0	0	4.00	UT	400.00	400.00	1	2020	2020	3	1	16	
45	0381	COOLER	0	0	16	14	224.00	SF	82.50	82.50	1	2020	2020	3	1	185	
46	0966	FIRE SPRNK	0	0	0	0	17,578.00	SF	3.00	3.00	1	2020	2020	3	1	527	

LAND DESCRIPTION

TOTAL OB/XF 751

LN	USE CODE	CLS	LAND USE DESCRIPTION	CAP	RD	LOC ZONE	FRONT	DEPTH	TOT LND UTS	UNIT TYPE	DT	DPTH FACT	% COND	TOT ADJ	UNIT PRICE	ADJ UNIT PRICE	LAND VALUE	OTHER ADJUSTMENTS AND NOTES	YEAR	DENSITY	DECL	FRZ	YR	CONSRV

REVIEW DATE 03/28/2022 **BY** DCA Total Acres: 0.00 Total Land Value: 1,350,000 Market: 0 Agricultural: 0 Common: 1,350,000 **PRINTED** 08/02/2023 BY SYS