BLOCK 129 N1/2 OF LOT 7
CASE #2009-229-CP OR 1714/1771
CITY OF FDNA BEACH

MCNEALY MILDRED HARKER
758 LYNTON STREET
JACKSONVILLE, FL 32208

2023

00-00-31-1800-0129-0071

NASSAU COUNTY PROPERTY

BUILDING CHARACTERISTICS

ELEMENT	CD	CONSTRUCTION
Exterior Wall	04	SINGLE SID 100
Roof Structur	03	GABLE/HIP 100
Roof Cover	12	MODULAR MT 100
Interior Wall	04	PLYWOOD 100
Interior Floo	14	CARPET 80
Interior Floo	08	SHT VINYL 20
Air Condition	02	WINDOW 100
Heating Type	02	CONVECTION 100
Bedrooms		2 100
Bathrooms		1 100
Frame	02	WOOD FRAME 100
Stories	1.	1. 100
Units		0 100
BUD8 Adjustme	02	DIST FB 100
Occupancy	00	NONE 100
Quality	02	Quality Level 02
DOR CODE	0100	SINGLE FAMILY
MAP NUM		MKT AREA 01
NEIGHBORHOOD/LOC	1009.00	

AREA TYPE	TOTAL GROSS AREA	PCT OF BASE	TOT ADJ AREA	SUBAREA MARKET VALUE
BAS	1,000	100	1,000	58,245
FOP	72	30	22	1,282
STP	15	10	2	116
UOP	30	20	6	349
TOTALS	1,117		1,030	59,993

MARKET ADJUSTMENTS

TYPE	MDL	EFF. AREA	TOT ADJ PTS	EFF. BASE RATE	REPL. COST NEW	AYB	EYB	ECON	FNCT		NORM	% COND
0100	01	1,030	87.2100	78.71	81,071	1920	1985	0	0	0	26.00	74.00

1 SINGLE FAM – 0% - 0 Heated Area: 1000 HX Base Yr

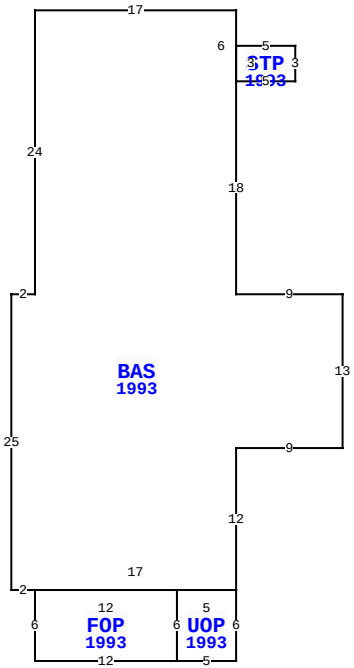

309 S 9TH ST, FERNANDINA BEACH

BLD DATE	02/04/2015 KK	LGL DATE	
XF DATE		LAND DATE	
INC DATE		AG DATE	

VALUATION SUMMARY

VALUATION BY	STANDARD
Tax Group: 2	Tax Dist:
BUILDING MARKET VALUE	59,993
TOTAL MARKET OB/XF VALUE	0
TOTAL LAND VALUE - MARKET	139,975
TOTAL MARKET VALUE	199,968
SOH/AGL Deduction	92,872
ASSESSED VALUE	107,096
TOTAL EXEMPTION VALUE	0
BASE TAXABLE VALUE	107,096
TOTAL JUST VALUE	199,968
NCON VALUE	0
INCOME VALUE	
PREVIOUS YEAR MKT VALUE	144,213

PERMIT NUM	DESCRIPTION	AMT	ISSUED
2003215	REPAIR/RRF	5,990	06/12/2000
2003206	REPAIR/RRF	1,350	06/12/2000

SALES DATA

OFF RECORD Number	DATE	TYPE INST	Q U /	V I /	RSN CD	SALE PRICE
0115/0479	1/01/1971	TA	U	I		2,500

GRANTOR:

GRANTEE:

BUILDING NOTES

BUILDING DIMENSIONS

BAS=[YR=1993] W9 N18 STP=[YR=1993] E5N3W5 S3$ N6W17 S24 W2 S25 E2 FOP=[YR=1993] S6 E12 UOP=[YR=1993] E5 N6 W5 S6 $ N6 W12 $ E17 N12 E9N13 $.

EXTRA FEATURES

L N	OB/XF CODE	DESCRIPTION	BLD	CAP	L	W	UNITS	UT	Adj R	ADJ UNIT PRICE	ORIG COND	YEAR ON	YEAR ACTUAL	Q	% COND	OB/XF MKT VALUE	NOTES

LAND DESCRIPTION

TOTAL OB/XF 0

L N	USE CODE	CLS	LAND USE DESCRIPTION	CAP	R D	LOC ZONE	FRONT	DEPTH	TOT LND UTS	UNIT TYPE	D T	DPTH FACT	% COND	TOT ADJ	UNIT PRICE	ADJ UNIT PRICE	LAND VALUE	OTHER ADJUSTMENTS AND NOTES	YEAR	DENSITY	DECL	FRZ	YR	CONSRV
1	000100	C	SFR	0	0006	MU-1	50.00	100.00	5,090.00	SF		1.00	1.00	1.10	25.00	27.50	139,975							

REVIEW DATE 06/29/2020 BY DJA Total Acres: 0.00 Total Land Value: 139,975 Market: 0 Agricultural: 0 Common: 139,975 PRINTED 08/02/2023 BY SYS