BLOCK 128 LOT 8
IN OR 2140/580
CITY OF FDNA BEACH

ISOLA VENTURES LLC
96271 DOWLING DR
YULEE, FL 32097

2023

00-00-31-1800-0128-0080

NASSAU COUNTY PROPERTY

BUILDING CHARACTERISTICS

ELEMENT	CD	CONSTRUCTION
Exterior Wall	10	ABOVE AVG 100
Roof Structur	08	IRREGULAR 100
Roof Cover	12	MODULAR MT 100
Interior Wall	03	PLASTER 100
Interior Floo	12	HARDWOOD 100
Air Condition	03	CENTRAL 100
Heating Type	04	AIR DUCTED 100
Bedrooms		4 100
Bathrooms		2 100
Frame	02	WOOD FRAME 100
Stories	2.	2. 100
Units		0 100
BUD8 Adjustme	02	DIST FB 100
Occupancy	00	NONE 100
Quality	05	Quality Level 05
DOR CODE	1100	STORES, 1 STORY
MAP NUM		MKT AREA 01
NEIGHBORHOOD/LOC	1005.00	

AREA TYPE	TOTAL GROSS AREA	PCT OF BASE	TOT ADJ AREA	SUBAREA MARKET VALUE
BAS	1,359	100	1,359	166,215
BAS	51	100	51	6,237
BAS	272	100	272	33,267
FOP	35	30	10	1,223
FOP	40	30	12	1,467
FUS	1,369	100	1,369	167,438
STR	20	10	2	244
UOP	16	20	3	367
UOP	104	20	21	2,568
TOTALS	3,266		3,099	379,030

MARKET ADJUSTMENTS

TYPE	MDL	EFF. AREA	TOT ADJ PTS	EFF. BASE RATE	REPL. COST NEW	AYB	EYB	ECON	FNCT	HS	NORM	% COND
0900	01	3,099	116.3800	138.20	428,282	1889	1904	0	0	-25	36.50	88.50

1 SNGL FAM – 0% - 0 Heated Area: 3051 HX Base Yr

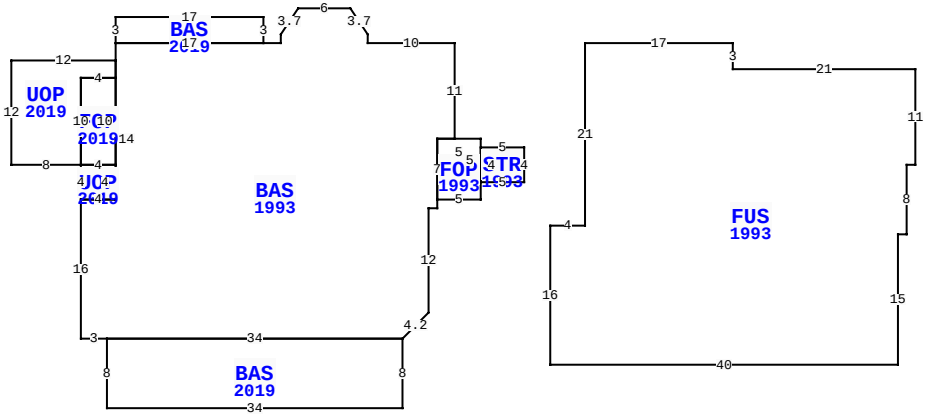

303 S 8TH ST, FERNANDINA BEACH

BLD DATE	03/30/2020 KK	LGL DATE	
XF DATE	03/30/2020 KK	LAND DATE	03/30/2020 KK
INC DATE		AG DATE	

VALUATION SUMMARY

VALUATION BY	STANDARD
Tax Group: 2	Tax Dist:
BUILDING MARKET VALUE	379,030
TOTAL MARKET OB/XF VALUE	6,443
TOTAL LAND VALUE - MARKET	400,000
TOTAL MARKET VALUE	785,473
SOH/AGL Deduction	325,748
ASSESSED VALUE	459,725
TOTAL EXEMPTION VALUE	0
BASE TAXABLE VALUE	459,725
TOTAL JUST VALUE	785,473
NCON VALUE	0
INCOME VALUE	
PREVIOUS YEAR MKT VALUE	734,224

PERMIT NUM	DESCRIPTION	AMT	ISSUED
20230006	REMOVE OLD ROOF,		02/23/2023
20190017	REMODEL	165,900	02/15/2019
7837	REPAIR/RRF	600	08/03/1993

SALES DATA

OFF RECORD Number	DATE	TYPE INST	Q / U	V / I	RSN CD	SALE PRICE
2140/0580	8/10/2017	WD	Q	I	01	368,300
GRANTOR: BENNER PATRICIA M						
GRANTEE: ISOLA VENTRUES LLC						
1275/1988	11/22/2004	QC	U	I	06	100
GRANTOR: MILLS R KENNETH						
GRANTEE: BENNER PATRICIA M						

BUILDING NOTES

BUILDING DIMENSIONS

BAS=[YR=1993] W10 N1 U3 L2 W6 D3 L2 S1 W2 BAS=[YR=2019] N3 W17 S3 E17$ W17 S2 UOP=[YR=2019] W12 S12 E8 N10 E4 N2$ S2 FOP=[YR=2019] W4 S10 UOP=[YR=2019] S4 E4 N4 W4$ E4 N10$ S14 W4 S16 E3 BAS=[YR=2019] S8 E34 N8 W34$ E34 U3 R3 N12 E1 N1 FOP=[YR=1993] E5 N2 STR=[YR=1993] E5 N4 W5 S4$ N5 W5 S7$ N7 E2 N11$ PTR= E15 FUS=[YR=1993] E17 S3 E21 S11 W1 S8 W1 S15 W40 N16 E4 N21$ W15$.

EXTRA FEATURES

LN	OB/XF CODE	DESCRIPTION	BLD	CAP	L	W	UNITS	UT	Adj R	ADJ UNIT PRICE	ORIG COND	YEAR ON	YEAR ACTUAL	Q	% COND	OB/XF MKT VALUE	NOTES
1	0810	CONCRETE A	0	0	0	0	268.00	SF	6.50	6.50	100	1994	1994	3	70	1,219	
2	0855	CONC PAVER	0	0	0	0	230.00	SF	10.00	10.00	100	2019	2019	3	99	2,277	
3	0810	CONCRETE A	0	0	0	0	458.00	SF	6.50	6.50	100	2019	2019	3	99	2,947	

LAND DESCRIPTION

TOTAL OB/XF 6,443

LN	USE CODE	CLS	LAND USE DESCRIPTION	CAP	RD	LOC ZONE	FRONT	DEPTH	TOT LND UTS	UNIT TYPE	DT	DPTH FACT	% COND	TOT ADJ	UNIT PRICE	ADJ UNIT PRICE	LAND VALUE	OTHER ADJUSTMENTS AND NOTES	YEAR	DENSITY	DECL	FRZ	YR	CONSRV
1	001100	C	STORE 1FLR	0	0003	C-3	100.00	100.00	10,000.00	SF		1.00	1.00	1.00	40.00	40.00	400,000							

REVIEW DATE 03/30/2020 BY KK Total Acres: 0.00 Total Land Value: 400,000 Market: 0 Agricultural: 0 Common: 400,000 PRINTED 08/02/2023 BY SYS