BLOCK 82 E1/2 OF LOT 8
CITY OF FDNA BEACH

KRISTOPHER SHERRY ANN/STARK ARTHUR DANIEL
1015 CALHOUN STREET
FERNANDINA BEACH, FL 32034

2023

00-00-31-1800-0082-0081

BUILDING CHARACTERISTICS

ELEMENT	CD	CONSTRUCTION
Exterior Wall	05	AVERAGE 100
Roof Structur	03	GABLE/HIP 100
Roof Cover	03	COMP SHNGL 100
Interior Wall	05	DRYWALL 100
Interior Floo	13	LVT/LAMNT 100
Air Condition	03	CENTRAL 100
Heating Type	04	AIR DUCTED 100
Bedrooms		2 100
Bathrooms		2 100
Frame	02	WOOD FRAME 100
Stories	1.	1. 100
Units		0 100
Occupancy	00	NONE 100
Quality	05	Quality Level 05

DOR CODE	0100	SINGLE FAMILY	
MAP NUM		MKT AREA	01
NEIGHBORHOOD/LOC	1001.00		

AREA TYPE	TOTAL GROSS AREA	PCT OF BASE	TOT ADJ AREA	SUBAREA MARKET VALUE
BAS	120	100	120	22,685
HXB	892	100	892	168,622
HXP	48	30	14	2,647
HXP	180	30	54	10,208
HXU	24	55	13	2,458
STR	24	10	2	378
STR	32	10	3	567
TOTALS	1,320		1,098	207,565

MARKET ADJUSTMENTS

TYPE	MDL	EFF. AREA	TOT ADJ PTS	EFF. BASE RATE	REPL. COST NEW	AYB	EYB	ECON	FNCT	PD	NORM	% COND
0900	01	1,098	129.4260	153.69	168,752	2017	2017	0	0	123	2.00	123.00

1 SNGL FAM – 100% - 2023 Heated Area: 1012 HX Base Yr 2023

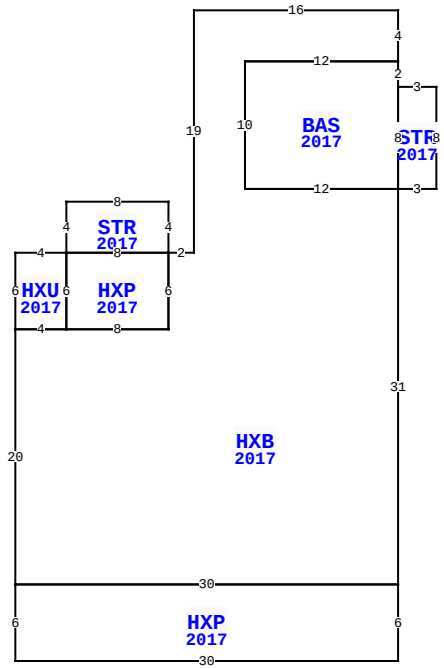

1015 CALHOUN ST, FERNANDINA BEACH

BLD DATE		LGL DATE	
XF DATE		LAND DATE	
INC DATE		AG DATE	

NASSAU COUNTY PROPERTY

PAGE 1 of 1 2

VALUATION SUMMARY

VALUATION BY		STANDARD
Tax Group: 2	Tax Dist:	
BUILDING MARKET VALUE		207,565
TOTAL MARKET OB/XF VALUE		0
TOTAL LAND VALUE - MARKET		175,000
TOTAL MARKET VALUE		382,565
SOH/AGL Deduction		0
ASSESSED VALUE		382,565
TOTAL EXEMPTION VALUE	HX HB	50,000
BASE TAXABLE VALUE		332,565
TOTAL JUST VALUE		382,565
NCON VALUE		0
INCOME VALUE		
PREVIOUS YEAR MKT VALUE		363,642

PERMIT NUM	DESCRIPTION	AMT	ISSUED
20161348	NEW CONSTR	119,131	05/11/2016

SALES DATA

OFF RECORD Number	DATE	TYPE INST	Q U	V I	RSN CD	SALE PRICE
2543/1828	2/28/2022	WD	Q	I	01	452,000
GRANTOR: SCHETROMPF KIMBERLY						
GRANTEE: KRISTOPHER SHERRY A						
2426/1249	1/20/2021	WD	Q	I	01	331,000
GRANTOR: FULGENTIZ BARBARA						
GRANTEE: D'AMATO CHARLES & K						

BUILDING NOTES

BUILDING DIMENSIONS

HXB=[YR=2017] W16 S19 W2 STR=[YR=2017] N4 W8 S4 HXP=[YR=2017] S6 E8 N6 W8$ E8$ S6 W8 HXU=[YR=2017] W4 N6 E4 S6$ W4 S20 HXP=[YR=2017] S6 E30 N6 W30$ E30 N31 STR=[YR=2017] E3 N8 W3 BAS=[YR=2017] N2 W12 S10 E12 N8$ S8$ W12 N10 E12 N4$.

EXTRA FEATURES

LN	OB/XF CODE	DESCRIPTION	BLD	CAP	L	W	UNITS	UT	Adj R	ADJ UNIT PRICE	ORIG COND	YEAR ON	YEAR ACTUAL	Q	% COND	OB/XF MKT VALUE	NOTES

LAND DESCRIPTION

TOTAL OB/XF 0

LN	USE CODE	CLS	LAND USE DESCRIPTION	CAP	RD	LOC ZONE	FRONT	DEPTH	TOT LND UTS	UNIT TYPE	DT	DPTH FACT	% COND	TOT ADJ	UNIT PRICE	ADJ UNIT PRICE	LAND VALUE	OTHER ADJUSTMENTS AND NOTES	YEAR	DENSITY	DECL	FRZ	YR	CONSRV
1	000100	C	SFR	100		R-2	50.00	100.00	50.00	FF		1.00	1.00	1.00	3,500.00	3,500.00	175,000							

REVIEW DATE 02/17/2023 BY TWDC Total Acres: 0.00 Total Land Value: 175,000 Market: 0 Agricultural: 0 Common: 175,000 PRINTED 08/02/2023 BY SYS