BLOCK 27 LOT 2
IN OR 2087/1979
CITY OF FDNA BEACH

KEGLER HAROLD A & SUSAN E
212 SOUTH 5TH ST
FERNANDINA BEACH, FL 32034

2023

00-00-31-1800-0027-0020

NASSAU COUNTY PROPERTY

BUILDING CHARACTERISTICS

ELEMENT	CD	CONSTRUCTION
Exterior Wall	10	ABOVE AVG 100
Roof Structur	03	GABLE/HIP 100
Roof Cover	03	COMP SHNGL 100
Interior Wall	05	DRYWALL 100
Interior Floo	11	CLAY TILE 60
Interior Floo	14	CARPET 40
Air Condition	03	CENTRAL 100
Heating Type	04	AIR DUCTED 100
Bedrooms		3 100
Bathrooms		3 100
Frame	02	WOOD FRAME 100
Stories	1.5	1.5 100
Units		0 100
Quality	05	Quality Level 05

DOR CODE 0100 SINGLE FAMILY
MAP NUM | MKT AREA 01
NEIGHBORHOOD/LOC 1005.00

AREA TYPE	TOTAL GROSS AREA	PCT OF BASE	TOT ADJ AREA	SUBAREA MARKET VALUE
BAS	1,528	100	1,528	280,113
FGR	273	55	150	27,498
FOP	120	30	36	6,600
FOP	144	30	43	7,883
FUS	367	100	367	67,278
STP	10	10	1	183
STR	33	10	3	550
UOP	25	20	5	917
TOTALS	2,500		2,133	391,021

MARKET ADJUSTMENTS

TYPE	MDL	EFF. AREA	TOT ADJ PTS	EFF. BASE RATE	REPL. COST NEW	AYB	EYB	ECON	FNCT		NORM	% COND
0900	11	2,133	158.3366	188.02	401,047	2016	2016	0	0	0	2.50	97.50

1 SNGL FAM – 100% - 2017 Heated Area: 1895 HX Base Yr 2017

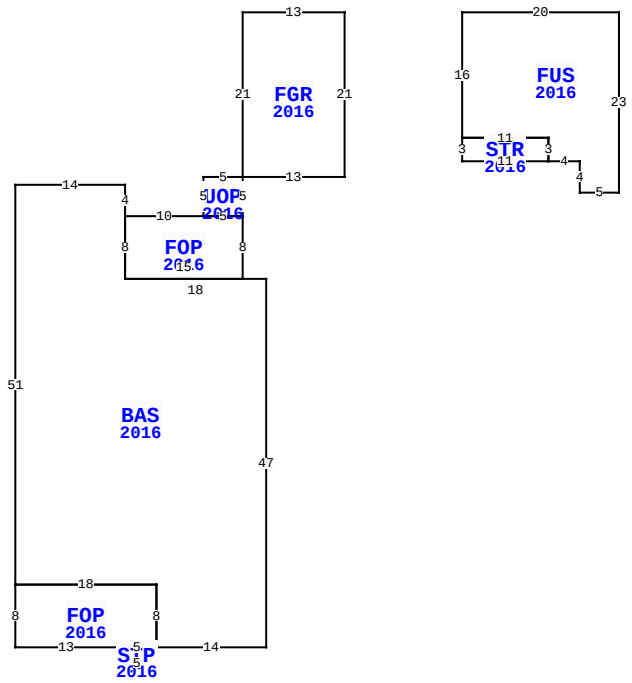

212 S 5TH ST, FERNANDINA BEACH

BLD DATE		LGL DATE	
XF DATE		LAND DATE	
INC DATE		AG DATE	

VALUATION SUMMARY

VALUATION BY		STANDARD
Tax Group: 2	Tax Dist:	
BUILDING MARKET VALUE		391,021
TOTAL MARKET OB/XF VALUE		330
TOTAL LAND VALUE - MARKET		200,000
TOTAL MARKET VALUE		591,351
SOH/AGL Deduction		211,622
ASSESSED VALUE		379,729
TOTAL EXEMPTION VALUE	HX HB	50,000
BASE TAXABLE VALUE		329,729
TOTAL JUST VALUE		591,351
NCON VALUE		0
INCOME VALUE		
PREVIOUS YEAR MKT VALUE		530,833

PERMIT NUM	DESCRIPTION	AMT	ISSUED
20160996	CO ISSUED	0	11/16/2016
20160996	NEW CONSTR	0	04/12/2016

SALES DATA

OFF RECORD Number	DATE	TYPE INST	Q U	V I	RSN CD	SALE PRICE
2087/1979	12/09/2016	WD	Q	I	01	435,000
GRANTOR: BURNS ROBERT THOMAS J						
GRANTEE: KEGLER HAROLD A & S						
2023/1108	1/15/2016	WD	Q	V	01	97,500
GRANTOR: WILSON EDWARD E & MAR						
GRANTEE: BURNS ROBERT THOMAS						

BUILDING NOTES

BUILDING DIMENSIONS

FGR=[YR=2016] W13 S21 UOP=[YR=2016] W5 S5 FOP=[YR=2016] W10 BAS=[YR=2016] N4 W14 S51 FOP=[YR=2016] S8 E13 STP=[YR=2016] S2 E5 N2 W5$ E5 N8 W18$ E18 S8 E14 N47 W18 N8$ S8 E15 N8 W5$ E5 N5$ E13 N21$ PTR= E15 FUS=[YR=2016] E20 S23 W5 N4 W4 STR=[YR=2016] W11 N3 E11 S3$ N3 W11 N16$ W15$.

EXTRA FEATURES

LN	OB/XF CODE	DESCRIPTION	BLD	CAP	L	W	UNITS	UT	Adj R	ADJ UNIT PRICE	ORIG COND	YEAR ON	YEAR ACTUAL	Q	% COND	OB/XF MKT VALUE	NOTES
1	0855	CONC PAVER	0	100	0	0	68.00	SF	5.00	5.00	100	2016	2016	3	97	330	

LAND DESCRIPTION

TOTAL OB/XF 330

LN	USE CODE	CLS	LAND USE DESCRIPTION	CAP	RD	LOC ZONE	FRONT	DEPTH	TOT LND UTS	UNIT TYPE	DT	DPTH FACT	% COND	TOT ADJ	UNIT PRICE	ADJ UNIT PRICE	LAND VALUE	OTHER ADJUSTMENTS AND NOTES	YEAR	DENSITY	DECL	FRZ	YR	CONSRV
1	000100	C	SFR	100	0006	R-2	50.00	100.00	50.00	FF		1.00	1.00	1.00	4,000.00	4,000.00	200,000							

REVIEW DATE 01/14/2021 BY KBA Total Acres: 0.00 Total Land Value: 200,000 Market: 0 Agricultural: 0 Common: 200,000 PRINTED 08/02/2023 BY SYS