BLOCK 26 LOT 14
PT OR 2296/611
CITY OF FDNA BEACH

W HOLDINGS GROUP LLC
4315 N MAIN ST
JACKSONVILLE, FL 32206

2023

00-00-31-1800-0026-0140

NASSAU COUNTY PROPERTY

BUILDING CHARACTERISTICS

ELEMENT	CD	CONSTRUCTION
Exterior Wall	10	ABOVE AVG 90
Exterior Wall	20	FACE BRICK 10
Roof Structur	04	WOOD TRUSS 100
Roof Cover	03	COMP SHNGL 100
Interior Wall	03	PLASTER 50
Interior Wall	05	DRYWALL 50
Interior Floo	14	CARPET 90
Interior Floo	08	SHT VINYL 10
Ceiling	03	PART.FIN. 100
Air Condition	03	CENTRAL 100
Heating Type	04	AIR DUCTED 100
Fixtures		4 100
Frame	02	WOOD FRAME 100
Story Height		9 100
RMS		6 100
Stories	1.	1. 100
Units		0 100
Occupancy	00	NONE 100
Quality	03	Quality Level 03

DOR CODE	7600	MORTUARY/CEMETERY	
MAP NUM		MKT AREA	01
NEIGHBORHOOD/LOC	1005.00		

AREA TYPE	TOTAL GROSS AREA	PCT OF BASE	TOT ADJ AREA	SUBAREA MARKET VALUE
BAS	660	100	660	69,850
BAS	1,198	100	1,198	126,787
FCP	450	30	135	14,288
FOP	28	30	8	846
FOP	63	30	19	2,011
UST	300	40	120	12,700
TOTALS	2,699		2,140	226,482

MARKET ADJUSTMENTS

TYPE	MDL	EFF. AREA	TOT ADJ PTS	EFF. BASE RATE	REPL. COST NEW	AYB	EYB	ECON	FNCT		NORM	% COND
7601	04	2,140	102.5325	127.91	273,727	1946	1985	0	0	0	17.26	82.74

1 MORTUARY - 0% - 0 Heated Area: 1858 HX Base Yr

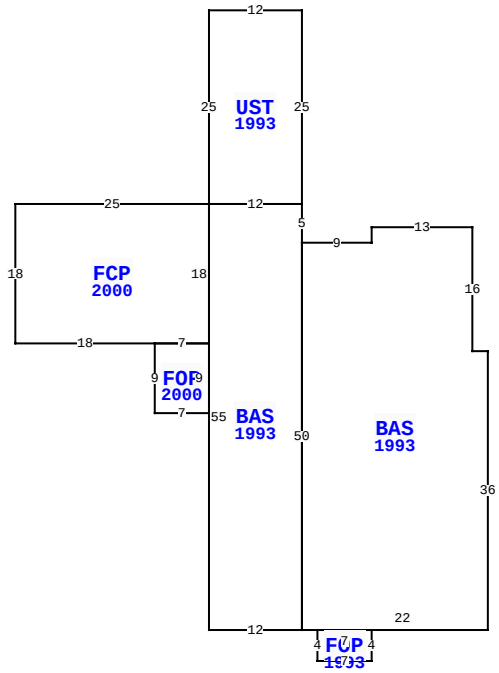

410 BEECH ST, FERNANDINA BEACH

BLD DATE	11/16/2017	KK	LGL DATE
XF DATE			LAND DATE
INC DATE			AG DATE

VALUATION SUMMARY

VALUATION BY	STANDARD
Tax Group: 2	Tax Dist:
BUILDING MARKET VALUE	226,482
TOTAL MARKET OB/XF VALUE	4,102
TOTAL LAND VALUE - MARKET	200,000
TOTAL MARKET VALUE	430,584
SOH/AGL Deduction	151,333
ASSESSED VALUE	279,251
TOTAL EXEMPTION VALUE	0
BASE TAXABLE VALUE	279,251
TOTAL JUST VALUE	430,584
NCON VALUE	0
INCOME VALUE	
PREVIOUS YEAR MKT VALUE	358,111

PERMIT NUM	DESCRIPTION	AMT	ISSUED
2002269	XFOB	800	02/23/2000
19990577	ADDITION	31,500	06/03/1999

SALES DATA

OFF RECORD Number	DATE	TYPE INST	Q U	V I	RSN CD	SALE PRICE
2296/0611	7/17/2019	WD	U	I	11	100
GRANTOR: JONES KAWAGA SHANTAL						
GRANTEE: W HOLDINGS GROUP LL						
2296/0608	7/16/2019	WD	U	I	11	100
GRANTOR: JONES LUCIANA CLORIND						
GRANTEE: JONES KAWAGA SHANTA						

BUILDING NOTES

BUILDING DIMENSIONS

BAS=[YR=1993] W2 N16 W13 S2 W9 BAS=[YR=1993] N5
UST=[YR=1993] N25 W12 S25 FCP=[YR=2000] W25 S18 E18
FOP=[YR=2000] S9 E7 N9 W7 $ E7 N18 $ E12 $ W12 S55 E12 N50 $
S50 E2 FOP=[YR=1993] S4 E7 N4 W7 $ E22 N36 $.

EXTRA FEATURES

LN	OB/XF CODE	DESCRIPTION	BLD	CAP	L	W	UNITS	UT	Adj R	ADJ UNIT PRICE	ORIG COND	YEAR ON	YEAR ACTUAL	Q	% COND	OB/XF MKT VALUE	NOTES
1	0811	CONCRETE B	0	0	0	0	645.00	SF	5.20	5.20	100	2000	2000	3	80	2,683	
2	0819	CONC 12"	0	0	18	6	108.00	SF	9.50	9.50	100	2000	2000	3	80	821	
3	0978	SECURTY LT	0	0	0	0	2.00	UT	450.00	450.00	100	2000	2000	3	55	495	
4	0819	CONC 12"	0	0	4	5	20.00	SF	9.50	9.50	100	1946	1946	3	20	38	
5	0441	STK FNC 4'	0	0	0	0	50.00	LF	6.50	6.50	100	2000	2000	3	20	65	

LAND DESCRIPTION

TOTAL OB/XF 4,102

LN	USE CODE	CLS	LAND USE DESCRIPTION	CAP	RD	LOC ZONE	FRONT	DEPTH	TOT LND UTS	UNIT TYPE	DT	DPTH FACT	% COND	TOT ADJ	UNIT PRICE	ADJ UNIT PRICE	LAND VALUE	OTHER ADJUSTMENTS AND NOTES	YEAR	DENSITY	DECL	FRZ	YR	CONSRV
1	007600	C	MORTUARY	0	0006	R-2	50.00	100.00	50.00	FF		1.00	1.00	1.00	4,000.00	4,000.00	200,000							

REVIEW DATE 08/01/2022 BY HSA Total Acres: 0.00 Total Land Value: 200,000 Market: 0 Agricultural: 0 Common: 200,000 PRINTED 08/02/2023 BY SYS