BLOCK 25 LOTS 3 & N1/2 OF 4
IN OR 608 PG 603
CITY OF FDNA BEACH

CASCONE JOHN J & JENNIFER KING
116 S 4TH ST
FERNANDINA BEACH, FL 32034

2023

00-00-31-1800-0025-0030

NASSAU COUNTY PROPERTY

BUILDING CHARACTERISTICS

ELEMENT	CD	CONSTRUCTION
Exterior Wall	10	ABOVE AVG 100
Roof Structur	03	GABLE/HIP 100
Roof Cover	03	COMP SHNGL 80
Roof Cover	12	MODULAR MT 20
Interior Wall	05	DRYWALL 100
Interior Floo	14	CARPET 70
Interior Floo	12	HARDWOOD 30
Air Condition	03	CENTRAL 100
Heating Type	04	AIR DUCTED 100
Bedrooms		3 100
Bathrooms		2 100
Frame	02	WOOD FRAME 100
Stories	1.	1. 100
Units		0 100
BUD8 Adjustme	02	DIST FB 100
Occupancy	00	NONE 100
Quality	03	Quality Level 03
DOR CODE	0100	SINGLE FAMILY
MAP NUM		MKT AREA 01
NEIGHBORHOOD/LOC	1005.00	

AREA TYPE	TOTAL GROSS AREA	PCT OF BASE	TOT ADJ AREA	SUBAREA MARKET VALUE
BAS	1,580	100	1,580	175,236
BAS	153	100	153	16,969
BAS	88	100	88	9,760
FGR	600	55	330	36,600
FOP	528	30	158	17,523
SFB	600	80	480	53,236
STR	8	10	1	111
TOTALS	3,557		2,790	309,435

MARKET ADJUSTMENTS

TYPE	MDL	EFF. AREA	TOT ADJ PTS	EFF. BASE RATE	REPL. COST NEW	AYB	EYB	ECON	FNCT		NORM	% COND
0900	01	2,790	104.3520	123.92	345,737	1900	2000	0	0	0	10.50	89.50

1 SNGL FAM – 100% - 0 Heated Area: 2301 HX Base Yr

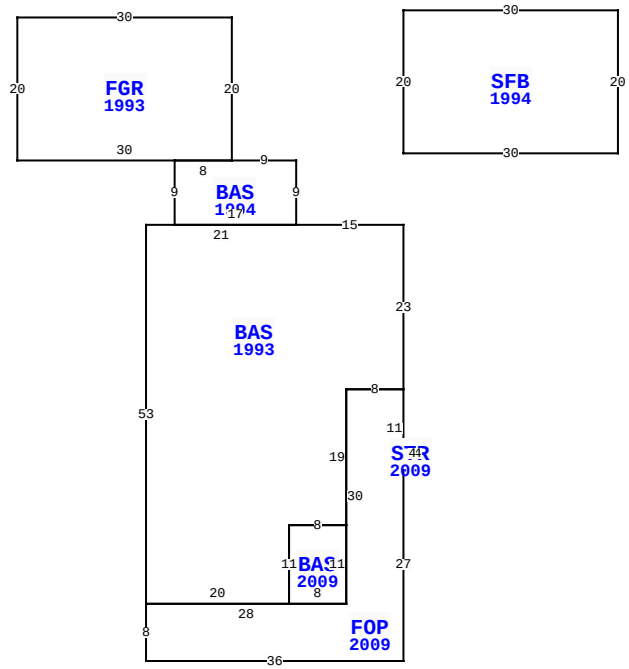

116 S 4TH ST, FERNANDINA BEACH

BLD DATE		LGL DATE	
XF DATE		LAND DATE	
INC DATE		AG DATE	

NASSAU COUNTY PROPERTY — VALUATION SUMMARY

VALUATION BY		STANDARD
Tax Group: 2	Tax Dist:	
BUILDING MARKET VALUE		309,435
TOTAL MARKET OB/XF VALUE		17,992
TOTAL LAND VALUE - MARKET		300,000
TOTAL MARKET VALUE		627,427
SOH/AGL Deduction		470,886
ASSESSED VALUE		156,541
TOTAL EXEMPTION VALUE	HX HB	50,000
BASE TAXABLE VALUE		106,541
TOTAL JUST VALUE		627,427
NCON VALUE		0
INCOME VALUE		
PREVIOUS YEAR MKT VALUE		534,141

PERMIT NUM	DESCRIPTION	AMT	ISSUED
20090188	METAL ROOF	2,200	02/11/2009
20090190	ELEC FOR REMODEL	1,100	02/11/2009
20090148	MOVE DUCTWORK	10,000	02/03/2009
Q0081762	200 AMP SERVICE	1,200	12/03/2008
20081638	H/AC	4,500	10/29/2008
20081349	ENCLOSE & ADD POR	20,000	09/03/2008

SALES DATA

OFF RECORD Number	DATE	TYPE INST	Q U	V I	RSN CD	SALE PRICE
0608/0603	9/25/1990	WD	Q	I		62,500
GRANTOR: GASS SUNHEE P						
GRANTEE: CASCONE JOHN & J K						
0602/1280	7/25/1990	QC	U	I	07	100
GRANTOR: GASS CHARLES & S P						
GRANTEE: GASS SUNHEE P						

BUILDING NOTES

BUILDING DIMENSIONS

BAS=[YR=1993] W15 BAS=[YR=1994] N9 W9 FGR=[YR=1993] N20 W30 S20 E30 $ W8 S9 E17 $ W21 S53 FOP=[YR=2009] S8E36 N27 STR=[YR=2009] E2N4W2S4$ N11W8S30 W28$E20 BAS=[YR=2009] E8 N11 W8 S11 $ N11 E8 N19 E8 N23 $ PTR= N10 SFB=[YR=1994] E30 N20W30 S20 $ S10$.

EXTRA FEATURES

LN	OB/XF CODE	DESCRIPTION	BLD	CAP	L	W	UNITS	UT	Adj R	ADJ UNIT PRICE	ORIG COND	YEAR ON	YEAR ACTUAL	Q	% COND	OB/XF MKT VALUE	NOTES
1	0500	FP-PRE FAB	0	100	0	0	1.00	UT	3,500.00	3,500.00	100	1980	1980	3	49	1,715	
3	1242	WD DECK A	0	100	4	5	20.00	SF	10.00	10.00	100	1994	1994	3	20	40	
4	0810	CONCRETE A	0	100	0	0	1,060.00	SF	6.50	6.50	100	1997	1997	3	75	5,168	
5	0861	POOL GUNIT	0	100	29	12	348.00	SF	85.00	85.00	100	1999	1999	3	25	7,395	
6	0845	KOOL DECK	0	100	0	0	400.00	SF	7.25	7.25	100	1999	1999	3	79	2,291	
7	0855	CONC PAVER	0	100	0	0	152.00	SF	10.00	10.00	100	2009	2009	3	91	1,383	

LAND DESCRIPTION

TOTAL OB/XF 17,992

LN	USE CODE	CLS	LAND USE DESCRIPTION	CAP	RD	LOC ZONE	FRONT	DEPTH	TOT LND UTS	UNIT TYPE	DT	DPTH FACT	% COND	TOT ADJ	UNIT PRICE	ADJ UNIT PRICE	LAND VALUE	OTHER ADJUSTMENTS AND NOTES	YEAR	DENSITY	DECL	FRZ	YR	CONSRV
1	000100	C	SFR	100	0006	R-2	75.00	100.00	75.00	FF		1.00	1.00	1.00	4,000.00	4,000.00	300,000							

REVIEW DATE 06/08/2018 BY DJX Total Acres: 0.00 Total Land Value: 300,000 Market: 0 Agricultural: 0 Common: 300,000 PRINTED 08/02/2023 BY SYS