BLOCK 25 LOT 2
IN OR 662 PG 97
CITY OF FDNA BEACH

CARVER STEVEN W & SANDRA B
110 S 4TH ST
FERNANDINA BEACH, FL 32034

2023

00-00-31-1800-0025-0020

BUILDING CHARACTERISTICS

ELEMENT	CD	CONSTRUCTION
Exterior Wall	10	ABOVE AVG 100
Roof Structur	03	GABLE/HIP 100
Roof Cover	03	COMP SHNGL 100
Interior Wall	05	DRYWALL 100
Interior Floo	14	CARPET 80
Interior Floo	11	CLAY TILE 20
Air Condition	03	CENTRAL 100
Heating Type	04	AIR DUCTED 100
Bedrooms		3 100
Bathrooms		2 100
Frame	02	WOOD FRAME 100
Stories	2.	2. 100
Units		0 100
Occupancy	00	NONE 100
Quality	04	Quality Level 04
DOR CODE	0100	SINGLE FAMILY
MAP NUM		MKT AREA 01
NEIGHBORHOOD/LOC	1005.00	

AREA TYPE	TOTAL GROSS AREA	PCT OF BASE	TOT ADJ AREA	SUBAREA MARKET VALUE
BAS	400	100	400	50,012
FEP	130	80	104	13,003
FGR	400	55	220	27,507
FOP	78	30	23	2,875
FOP	60	30	18	2,251
FUS	838	100	838	104,774
FUS	103	100	103	12,878
UOP	78	20	16	2,000
UOP	60	20	12	1,501
TOTALS	2,147		1,734	216,800

MARKET ADJUSTMENTS

TYPE	MDL	EFF. AREA	TOT ADJ PTS	EFF. BASE RATE	REPL. COST NEW	AYB	EYB	ECON	FNCT		NORM	% COND
0900	01	1,734	120.3300	142.89	247,771	1993	1996	0	0	0	12.50	87.50

1 SNGL FAM – 100% - 0 Heated Area: 1341 HX Base Yr

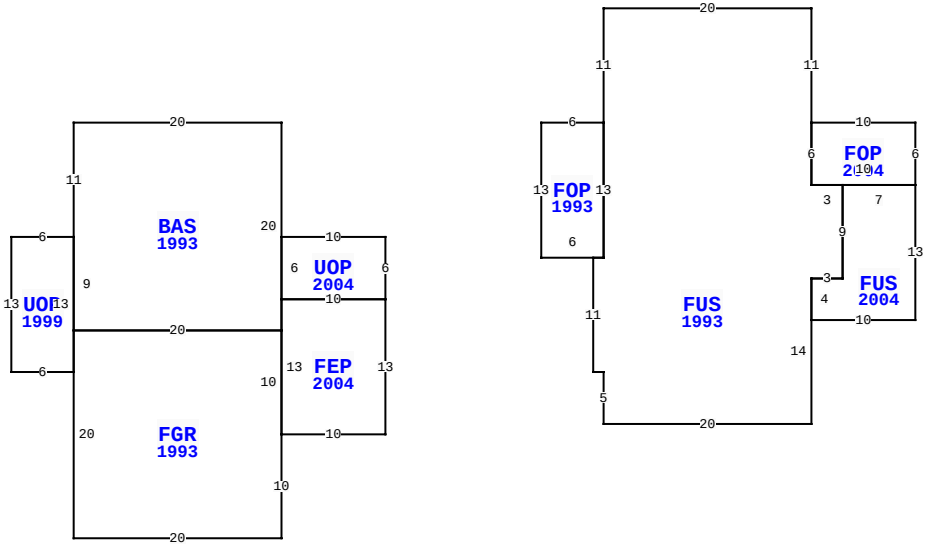

110 S 4TH ST, FERNANDINA BEACH

BLD DATE		LGL DATE	
XF DATE		LAND DATE	
INC DATE		AG DATE	

NASSAU COUNTY PROPERTY

PAGE 1 of 1 2

VALUATION SUMMARY

VALUATION BY		STANDARD
Tax Group: 2	Tax Dist:	
BUILDING MARKET VALUE		216,800
TOTAL MARKET OB/XF VALUE		6,301
TOTAL LAND VALUE - MARKET		200,000
TOTAL MARKET VALUE		423,101
SOH/AGL Deduction		283,485
ASSESSED VALUE		139,616
TOTAL EXEMPTION VALUE	HX HB	50,000
BASE TAXABLE VALUE		89,616
TOTAL JUST VALUE		423,101
NCON VALUE		0
INCOME VALUE		
PREVIOUS YEAR MKT VALUE		361,078

PERMIT NUM	DESCRIPTION	AMT	ISSUED
20120403	REROOF LIFETIME S	5,750	03/13/2012
20061424	H/AC	3,000	06/22/2006
20033962	RELOCATER KIT.FIX	0	10/08/2003
20033906	ADD H/AC & DUCTWO	1,000	09/30/2003
20033907	NEW ELECTRIC REMO	3,000	09/30/2003
20033704	240 SF ADDITION	30,000	08/20/2003

SALES DATA

OFF RECORD Number	DATE	TYPE INST	Q U	V I	RSN CD	SALE PRICE
0662/0097	6/25/1992	WD	Q	V		17,500
GRANTOR: MCFADDEN ANDREW & C						
GRANTEE: CARVER STEVEN & S B						
0307/0758	1/01/1980	MS	Q	I		12,500
GRANTOR:						
GRANTEE:						

BUILDING NOTES

BUILDING DIMENSIONS

BAS=[YR=1993] W20 S11 UOP=[YR=1999] W6 S13 E6 N13 $ S9
FGR=[YR=1993] S20 E20 N10 FEP=[YR=2004] E10 N13
UOP=[YR=2004] N6 W10 S6 E10$ W10 S13 $ N10W20$ E20 N20$ PTR=
E25 FOP=[YR=1993] E6 FUS=[YR=1993] N11 E20 S11
FOP=[YR=2004] E10 S6 FUS=[YR=2004] S13 W10 N4 E3 N9 E7$ W10
N6$ S6 E3 S9 W3 S14 W20 N5 W1 N11 E1 N13 $ S13 W6 N13 $ W25 $
.

EXTRA FEATURES

LN	OB/XF CODE	DESCRIPTION	BLD	CAP	L	W	UNITS	UT	Adj R	ADJ UNIT PRICE	ORIG COND	YEAR ON	YEAR ACTUAL	Q	% COND	OB/XF MKT VALUE	NOTES
1	0510	GARAGE WD-	0	100	16	12	192.00	SF	35.00	35.00	100	1975	1975	3	20	1,344	
2	0810	CONCRETE A	0	100	0	0	860.00	SF	6.50	6.50	100	1993	1993	3	68	3,801	
3	0810	CONCRETE A	0	100	4	32	128.00	SF	6.50	6.50	100	1999	1999	3	79	657	
6	0350	CARPORT WD	0	100	16	6	96.00	SF	13.00	13.00	100	1975	1975	3	20	250	
7	0810	CONCRETE A	0	100	2	18	36.00	SF	6.50	6.50	100	1950	1950	3	20	47	
8	1241	WD DECK G	0	100	11	4	44.00	UT	11.50	11.50	100	2004	2004	3	40	202	

LAND DESCRIPTION

TOTAL OB/XF 6,301

LN	USE CODE	CLS	LAND USE DESCRIPTION	CAP	RD	LOC ZONE	FRONT	DEPTH	TOT LND UTS	UNIT TYPE	DT	DPTH FACT	% COND	TOT ADJ	UNIT PRICE	ADJ UNIT PRICE	LAND VALUE	OTHER ADJUSTMENTS AND NOTES	YEAR	DENSITY	DECL	FRZ	YR	CONSRV
1	000100	C	SFR	100	0006	R-2	50.00	100.00	50.00	FF		1.00	1.00	1.00	4,000.00	4,000.00	200,000							

REVIEW DATE 06/08/2018 BY DJX Total Acres: 0.00 Total Land Value: 200,000 Market: 0 Agricultural: 0 Common: 200,000 PRINTED 08/02/2023 BY SYS