BLK 23 LOT 14 & E 30FT OF LOT
15 & E 80FT LOT 13
IN OR 2420/403

NASSAU TRUST LLC
P O BOX 52
FERNANDINA BEACH, FL 32035

2023

00-00-31-1800-0023-0130

BUILDING CHARACTERISTICS

ELEMENT	CD	CONSTRUCTION
Exterior Wall	10	ABOVE AVG 100
Roof Structur	08	IRREGULAR 100
Roof Cover	03	COMP SHNGL 100
Interior Wall	03	PLASTER 50
Interior Wall	05	DRYWALL 50
Interior Floo	12	HARDWOOD 100
Air Condition	03	CENTRAL 100
Heating Type	04	AIR DUCTED 100
Bedrooms		4 100
Bathrooms		4 100
Frame	02	WOOD FRAME 100
Stories	2.	2. 100
Units		0 100
BUD8 Adjustme	02	DIST FB 100
Occupancy	00	NONE 100
Quality	03	Quality Level 03
DOR CODE	0100	SINGLE FAMILY
MAP NUM		MKT AREA 01
NEIGHBORHOOD/LOC	1002.00	

AREA TYPE	TOTAL GROSS AREA	PCT OF BASE	TOT ADJ AREA	SUBAREA MARKET VALUE
BAS	1,649	100	1,649	203,760
FOP	9	30	3	371
FOP	510	30	153	18,906
FOP	9	30	3	371
FOP	90	30	27	3,337
FOP	510	30	153	18,906
FUS	1,575	100	1,575	194,616
STR	60	10	6	741
UDG	540	55	297	36,699
USP	88	30	26	3,213
TOTALS	5,072		3,906	482,648

MARKET ADJUSTMENTS

TYPE	MDL	EFF. AREA	TOT ADJ PTS	EFF. BASE RATE	REPL. COST NEW	AYB	EYB	ECON	FNCT		NORM	% COND
0500	01	3,906	105.7500	150.69	588,595	1856	1978	0	0	0	18.00	82.00

1 SFR CUST - 0% - 0 Heated Area: 3224 HX Base Yr

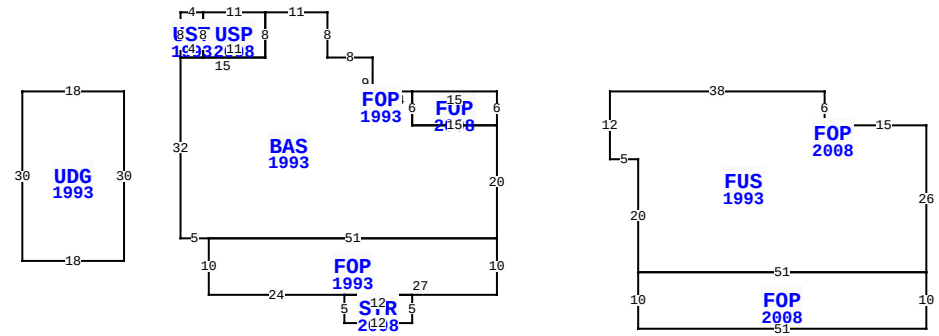

** This building has 11 Sub-Areas

415 CENTRE ST, FERNANDINA BEACH

BLD DATE		LGL DATE	
XF DATE		LAND DATE	
INC DATE		AG DATE	

NASSAU COUNTY PROPERTY

PAGE 1 of 1 2

VALUATION SUMMARY

VALUATION BY	STANDARD
Tax Group: 2	Tax Dist:
BUILDING MARKET VALUE	482,648
TOTAL MARKET OB/XF VALUE	10,665
TOTAL LAND VALUE - MARKET	840,000
TOTAL MARKET VALUE	1,333,313
SOH/AGL Deduction	163,263
ASSESSED VALUE	1,170,050
TOTAL EXEMPTION VALUE	0
BASE TAXABLE VALUE	1,170,050
TOTAL JUST VALUE	1,333,313
NCON VALUE	9,095
INCOME VALUE	
PREVIOUS YEAR MKT VALUE	1,257,839

PERMIT NUM	DESCRIPTION	AMT	ISSUED
20210209	REMODEL	45,000	08/11/2021
20210180	XFOB - ADA RAMP	20,000	04/22/2021
20120763	H/AC	3,500	05/02/2012
20061320	REROOF W/30YR SHN	5,292	06/12/2006
011431	XFOB	2,000	06/26/2001
8183	REPAIR/RRF	6,000	03/07/1994

SALES DATA

OFF RECORD Number	DATE	TYPE INST	Q / U	V / I	RSN CD	SALE PRICE
2420/0403	12/17/2020	WD	Q	I	01	1,150,000
GRANTOR: FRANKENFIELD JENNIFER						
GRANTEE: NASSAU TRUST LLC						
1980/1094	5/18/2015	WD	U	I	30	750,000
GRANTOR: WHITMIRE ANGEL ET AL						
GRANTEE: WHITMIRE JENNIFER N						

BUILDING NOTES

BUILDING DIMENSIONS

FOP=[YR=2008] W15 BAS=[YR=1993] W4 FOP=[YR=1993] W3 S3 E3 N3$ S3 W3 N9 W8 N8 W11 USP=[YR=2008] W11 UST=[YR=1993] W4 S8 E4 N8$ S8 E11 N8$ S8 W15 S32 E5 FOP=[YR=1993] S10 E24 STR=[YR=2008] S5 E12 N5 W12$ E27 N10 W51$ E51 N20 W15 N6$ S6 E15 N6 $ PTR=E20 FUS=[YR=1993] E38 S6 FOP=[YR=2008] E3 S3 W3 N3$ S3 E3 N3 E15 S26 FOP=[YR=2008] S10 W51 N10 E51$ W51 N20 W5 N12$ W20$ PTR= W66 UDG=[YR=1993] W18 S30 E18 N30$ E66$.

EXTRA FEATURES

LN	OB/XF CODE	DESCRIPTION	BLD	CAP	L	W	UNITS	UT	Adj R	ADJ UNIT PRICE	ORIG COND	YEAR ON	YEAR ACTUAL	Q	% COND	OB/XF MKT VALUE	NOTES
1	0810	CONCRETE A	0	0	0	0	406.00	SF	6.50	6.50	100	1989	1989	3	59.5	1,570	
2	0825	BRICK	0	0	0	0	3,638.00	SF	12.50	12.50	100	1856	1856	3	20	9,095	

LAND DESCRIPTION

TOTAL OB/XF 10,665

LN	USE CODE	CLS	LAND USE DESCRIPTION	CAP	RD	LOC ZONE	FRONT	DEPTH	TOT LND UTS	UNIT TYPE	DT	DPTH FACT	% COND	TOT ADJ	UNIT PRICE	ADJ UNIT PRICE	LAND VALUE	OTHER ADJUSTMENTS AND NOTES	YEAR	DENSITY	DECL	FRZ	YR	CONSRV
1	000100	C	SFR	0	0003	C-3	80.00	150.00	12,000.00	SF		1.00	1.00	0.70	100.00	70.00	840,000							

REVIEW DATE 01/31/2023 BY DJ Total Acres: 0.00 Total Land Value: 840,000 Market: 0 Agricultural: 0 Common: 840,000 PRINTED 08/02/2023 BY SYS