BLK 23 S1/2 OF LOT 3
CITY OF FDNA BEACH S/D OF
SEC 22-3N-28E UNR

LAMAR RICHARD RON & BEVERLY A/KRIESEL MERELIE
14 NORTH 4TH STREET
FERNANDINA BEACH, FL 32034

2023

00-00-31-1800-0023-0032

BUILDING CHARACTERISTICS

ELEMENT	CD	CONSTRUCTION
Exterior Wall	16	WD FR STUC 70
Exterior Wall	19	COMMON BRK 30
Roof Structur	03	GABLE/HIP 100
Roof Cover	12	MODULAR MT 100
Interior Wall	05	DRYWALL 100
Interior Floo	12	HARDWOOD 80
Interior Floo	15	HARDTILE 20
Air Condition	03	CENTRAL 100
Heating Type	04	AIR DUCTED 100
Bedrooms		3 100
Bathrooms		3 100
Frame	02	WOOD FRAME 100
Stories	2.	2. 100
Units		0 100
BUD8 Adjustme	02	DIST FB 100
Occupancy	00	NONE 100
Quality	06	Quality Level 06
DOR CODE	1200	STORE/OFFICE/RESID
MAP NUM		MKT AREA 01
NEIGHBORHOOD/LOC	1005.00	

AREA TYPE	TOTAL GROSS AREA	PCT OF BASE	TOT ADJ AREA	SUBAREA MARKET VALUE
CAN	34	30	10	2,570
HXB	360	100	360	92,529
HXB	819	100	819	210,502
HXB	1,303	100	1,303	334,900
HXG	484	55	266	68,368
HXO	40	5	2	514
HXO	72	5	4	1,027
HXO	100	5	5	1,286
HXP	63	30	19	4,883
HXP	90	30	27	6,940
TOTALS	4,153		3,470	891,870

MARKET ADJUSTMENTS

TYPE	MDL	EFF. AREA	TOT ADJ PTS	EFF. BASE RATE	REPL. COST NEW	AYB	EYB	ECON	FNCT	PD	NORM	% COND
0500	01	3,470	125.6904	179.11	621,512	1947	2012	0	143.5		6.50	143.50

1 SFR CUST – 82.19% - 2021 Heated Area: 3078 HX Base Yr 2021

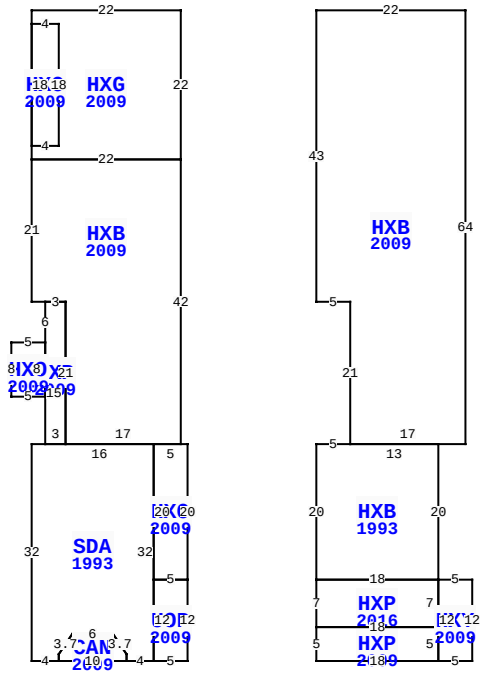

** This building has 14 Sub-Areas

14 N 4TH ST, FERNANDINA BEACH

BLD DATE	12/30/2021	KK	LGL DATE	
XF DATE	12/30/2021	KK	LAND DATE	12/30/2021 KK
INC DATE			AG DATE	

NASSAU COUNTY PROPERTY

PAGE 1 of 1 2

VALUATION SUMMARY

VALUATION BY		STANDARD
Tax Group: 2	Tax Dist:	
BUILDING MARKET VALUE		891,870
TOTAL MARKET OB/XF VALUE		17,362
TOTAL LAND VALUE - MARKET		175,000
TOTAL MARKET VALUE		1,084,232
SOH/AGL Deduction		137,530
ASSESSED VALUE		946,702
TOTAL EXEMPTION VALUE	HX HB	50,000
BASE TAXABLE VALUE		896,702
TOTAL JUST VALUE		1,084,232
NCON VALUE		0
INCOME VALUE		
PREVIOUS YEAR MKT VALUE		981,396

PERMIT NUM	DESCRIPTION	AMT	ISSUED
20161026	REMODEL-KITCHEN	50,000	04/13/2016
20150458	SIGN	1,000	03/03/2015
20101911	SIGN	200	11/03/2010
20101506	XFOB	1,625	09/02/2010
20081257	H/AC	0	08/06/2008
20080924	OTHER	5,000	06/02/2008

SALES DATA

OFF RECORD Number	DATE	TYPE INST	Q / U	V / I	RSN CD	SALE PRICE
2322/0093	12/02/2019	WD	Q	I	01	1,100,000
GRANTOR: KRIESEL JACK & MERELI						
GRANTEE: LAMAR RICHARD RON &						
2034/0512	3/11/2016	WD	Q	I	02	632,000
GRANTOR: HENRY JUNE R TRUST						
GRANTEE: KRIESEL JACK & MERE						

BUILDING NOTES

BUILDING DIMENSIONS

HXG=[YR=2009] W22 S2 HXO=[YR=2009] E4 S18 W4 N18 $ S20 HXB=[YR=2009] S21 E2 HXP=[YR=2009] S6 HXO=[YR=2009] W5 S8 E5N8 $ S15 SDA=[YR=1993] W2 S32E4 CAN=[YR=2009] E10 N1 L2 U3 W6 L2 D3 S1$ N1 U3 R2 E6 D3 R2 S1 E4 UOP=[YR=2009] E5 N12 HXO=[YR=2009] N20 W5 S20 E5 $ W5 S12$ N32 W16 $E3 N21 W3 $ E3 S21 E17 N42 W22 $ E22 N22 $ PTR= E20 HXB=[YR=2009] S43 E5 S21 HXB=[YR=1993] W5 S20 HXP=[YR=2016] S7 HXP=[YR=2009] S5 E18 HXY=[YR=2009] E5 N12 W5 S12$ N5 W18$ E18 N7 W18$ E18 N20 W13$ E17 N64 W22$ W20$.

EXTRA FEATURES

LN	OB/XF CODE	DESCRIPTION	BLD	CAP	L	W	UNITS	UT	Adj R	ADJ UNIT PRICE	ORIG COND	YEAR ON	YEAR ACTUAL	Q	% COND	OB/XF MKT VALUE	NOTES
1	0409	ELEVATOR R	0	100	0	0	1.00	UT	12,750.00	12,750.00	100	2009	2009	3	100	12,750	
2	0500	FP-PRE FAB	0	100	0	0	1.00	UT	4,375.00	4,375.00	100	2009	2009	3	94	4,113	
3	0097	AWNING CN	0	100	0	0	12.00	SF	65.00	65.00	100	2010	2010	3	64	499	

LAND DESCRIPTION

TOTAL OB/XF 17,362

LN	USE CODE	CLS	LAND USE DESCRIPTION	CAP	RD	LOC ZONE	FRONT	DEPTH	TOT LND UTS	UNIT TYPE	DT	DPTH FACT	% COND	TOT ADJ	UNIT PRICE	ADJ UNIT PRICE	LAND VALUE	OTHER ADJUSTMENTS AND NOTES	YEAR	DENSITY	DECL	FRZ	YR	CONSRV
1	001200	C	STORE COMB	0	0003	C-3	25.00	100.00	2,500.00	SF		1.00	1.00	1.00	70.00	70.00	175,000							

REVIEW DATE 12/30/2021 BY KK Total Acres: 0.00 Total Land Value: 175,000 Market: 0 Agricultural: 0 Common: 175,000 PRINTED 08/02/2023 BY SYS