BLOCK 13 LOTS S 76 FT OF
10 11 12 13 & 14
IN OR 1915/1439

ERICKSON ROBERT D & LORRETTA L
30 S 3RD ST
FERNANDINA BEACH, FL 32034

2023

00-00-31-1800-0013-0100

BUILDING CHARACTERISTICS

ELEMENT	CD	CONSTRUCTION
Exterior Wall	10	ABOVE AVG 100
Roof Structur	03	GABLE/HIP 100
Roof Cover	03	COMP SHNGL 100
Interior Wall	05	DRYWALL 100
Interior Floo	12	HARDWOOD 90
Interior Floo	11	CLAY TILE 10
Air Condition	03	CENTRAL 100
Heating Type	04	AIR DUCTED 100
Bedrooms		3 100
Bathrooms		4 100
Frame	02	WOOD FRAME 100
Stories	2.	2. 100
Units		0 100
BUD8 Adjustme	02	DIST FB 100
Occupancy	00	NONE 100
Quality	03	Quality Level 03
DOR CODE	0100	SINGLE FAMILY
MAP NUM		MKT AREA 01
NEIGHBORHOOD/LOC	1005.00	

AREA TYPE	TOTAL GROSS AREA	PCT OF BASE	TOT ADJ AREA	SUBAREA MARKET VALUE
BAS	1,353	100	1,353	189,994
BAS	494	100	494	69,369
FEP	128	80	102	14,324
FOP	27	30	8	1,123
FOP	72	30	22	3,090
FOP	244	30	73	10,251
FUS	1,073	100	1,073	150,675
STP	9	10	1	141
STP	24	10	2	281
UOP	272	20	54	7,583
TOTALS	3,696		3,182	446,830

MARKET ADJUSTMENTS

TYPE	MDL	EFF. AREA	TOT ADJ PTS	EFF. BASE RATE	REPL. COST NEW	AYB	EYB	ECON	FNCT	HS	NORM	% COND
0500	01	3,182	106.5360	151.81	483,059	1900	1900	0	0	-30	37.50	92.50

1 SFR CUST – 100% - 2015 Heated Area: 2920 HX Base Yr 2015

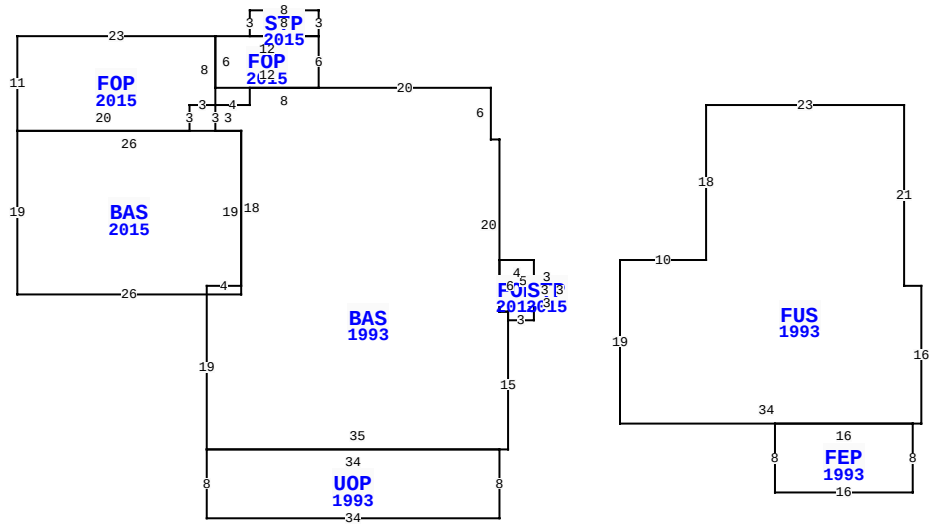

30 S 3RD ST, FERNANDINA BEACH

BLD DATE		LGL DATE	
XF DATE		LAND DATE	
INC DATE		AG DATE	

NASSAU COUNTY PROPERTY

PAGE 1 of 1 2

VALUATION SUMMARY

VALUATION BY		STANDARD
Tax Group: 2	Tax Dist:	
BUILDING MARKET VALUE		446,830
TOTAL MARKET OB/XF VALUE		3,407
TOTAL LAND VALUE - MARKET		522,500
TOTAL MARKET VALUE		972,737
SOH/AGL Deduction		444,409
ASSESSED VALUE		528,328
TOTAL EXEMPTION VALUE	HX HB	50,000
BASE TAXABLE VALUE		478,328
TOTAL JUST VALUE		972,737
NCON VALUE		0
INCOME VALUE		
PREVIOUS YEAR MKT VALUE		920,037

PERMIT NUM	DESCRIPTION	AMT	ISSUED
20151225	KITCHENADD	105,000	05/29/2015
20122204	ROW CONCRETE	0	10/26/2012
20121680	6'WOOD FENCE	0	08/15/2012
20121312	H/AC	9,000	07/03/2012
20121281	NEW PLUMBING	4,500	06/28/2012
20121283	COPPER WIRE FOR W	1,250	06/28/2012

SALES DATA

OFF RECORD Number	DATE	TYPE INST	Q U	V I	RSN CD	SALE PRICE
1915/1439	5/02/2014	WD	Q	I	01	525,000
GRANTOR: MOCK DOUGLAS ANDY & S						
GRANTEE: ERICKSON ROBERT D &						
1625/1921	6/22/2009	WD	Q	I	02	225,000
GRANTOR: PARK MELBA ELIZABETH						
GRANTEE: MOCK DOUGLAS ANDY &						

BUILDING NOTES

BUILDING DIMENSIONS

BAS=[YR=1993] W20 FOP=[YR=2015] N6 STP=[YR=2015] N3 W8 S3 E8$ W12 FOP=[YR=2015] W23 S11 BAS=[YR=2015] S19 E26 N19 W26$ E20 N3 E3 N8$ S6 E12$ W8 S2 W4 S3 E3 S18 W4 S19 UOP=[YR=1993] S8 E34 N8 W34 $ E35 N15 FOP=[YR=2015] E3 N2 STP=[YR=2015] E3 N3 W3 S3$ N5 W4 S6 E1 S1$ N1 W1 N20 W1 N6 $ PTR= E15S20 FUS=[YR=1993] E10 N18 E23 S21E2 S16 W1 FEP=[YR=1993] S8 W16 N8 E16 $ W34 N19 $ W15N20 $.

EXTRA FEATURES

LN	OB/XF CODE	DESCRIPTION	BLD	CAP	L	W	UNITS	UT	Adj R	ADJ UNIT PRICE	ORIG COND	YEAR ON	YEAR ACTUAL	Q	% COND	OB/XF MKT VALUE	NOTES
1	0510	GARAGE WD-	0	100	14	24	336.00	SF	17.50	17.50	100	1950	1950	3	20	1,176	
3	0810	CONCRETE A	0	100	25	8	200.00	SF	6.50	6.50	100	2001	2001	3	82	1,066	
4	0810	CONCRETE A	0	100	16	32	512.00	SF	6.50	6.50	100	1980	1980	3	35	1,165	

LAND DESCRIPTION

TOTAL OB/XF 3,407

LN	USE CODE	CLS	LAND USE DESCRIPTION	CAP	RD	LOC ZONE	FRONT	DEPTH	TOT LND UTS	UNIT TYPE	DT	DPTH FACT	% COND	TOT ADJ	UNIT PRICE	ADJ UNIT PRICE	LAND VALUE	OTHER ADJUSTMENTS AND NOTES	YEAR	DENSITY	DECL	FRZ	YR	CONSRV
1	000100	C	SFR	100	0003	C-3	76.00	125.00	9,500.00	SF		1.00	1.00	1.00	55.00	55.00	522,500							

REVIEW DATE 07/06/2020 BY DJA Total Acres: 0.00 Total Land Value: 522,500 Market: 0 Agricultural: 0 Common: 522,500 PRINTED 08/02/2023 BY SYS