BLOCK 8 LOT S1/2 OF 10 TO 14
PT OR 1707/429
CITY OF FDNA BEACH

HAMBROCK LUDGER/
1719 LISA AVENUE
FERNANDINA BEACH, FL 32034

2023

00-00-31-1800-0008-0102

BUILDING CHARACTERISTICS

ELEMENT	CD	CONSTRUCTION
Exterior Wall	17	CB STUCCO 100
Roof Structur	04	WOOD TRUSS 100
Roof Cover	12	MODULAR MT 100
Interior Wall	05	DRYWALL 100
Interior Floo	04	C ABOVE GD 60
Interior Floo	11	CLAY TILE 40
Ceiling	02	F.NOT SUS 100
Air Condition	02	WINDOW 100
Heating Type	01	NONE 100
Plumbing		9 100
Frame	03	MASONRY 100
Story Height		11 100
RMS		3 100
Stories	2.	2. 100
Class	00	. 100
Units		0 100
BUD8 Adjustme	02	DIST FB 100
Occupancy	00	NONE 100
Quality	03	Quality Level 03
DOR CODE	4800	WAREHOUSE-STORAGE
MAP NUM		MKT AREA 01
NEIGHBORHOOD/LOC	1004.00	

AREA TYPE	TOTAL GROSS AREA	PCT OF BASE	TOT ADJ AREA	SUBAREA MARKET VALUE
APT	864	250	2,160	29,732
BAS	3,504	100	3,504	48,232
BAS	480	100	480	6,607
CAN	210	30	63	867
CLP	162	60	97	1,335
ULP	977	30	293	4,033
TOTALS	6,197		6,597	90,807

MARKET ADJUSTMENTS

TYPE	MDL	EFF. AREA	TOT ADJ PTS	EFF. BASE RATE	REPL. COST NEW	AYB	EYB	ECON	FNCT		NORM	% COND
4803	06	6,597	103.4846	49.16	324,309	1980	1980	0	0	0	72.00	28.00

1 STOR WAREH – 0% - 0 Heated Area: 4848 HX Base Yr

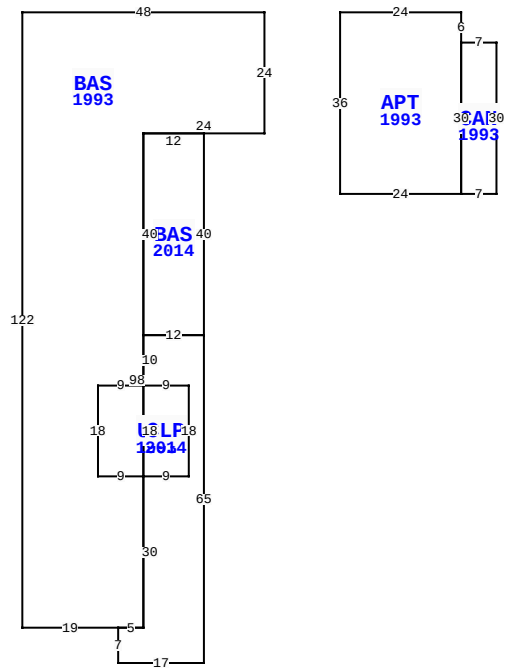

228 N 2ND ST, FERNANDINA BEACH

BLD DATE	06/10/2021	KK	LGL DATE	
XF DATE	06/10/2021	KK	LAND DATE	06/10/2021 KK
INC DATE			AG DATE	

NASSAU COUNTY PROPERTY

PAGE 1 of 1 2

VALUATION SUMMARY

VALUATION BY	STANDARD
Tax Group: 2	Tax Dist:
BUILDING MARKET VALUE	90,807
TOTAL MARKET OB/XF VALUE	7,195
TOTAL LAND VALUE - MARKET	40,625
TOTAL MARKET VALUE	138,627
SOH/AGL Deduction	10,125
ASSESSED VALUE	128,502
TOTAL EXEMPTION VALUE	0
BASE TAXABLE VALUE	128,502
TOTAL JUST VALUE	138,627
NCON VALUE	0
INCOME VALUE	
PREVIOUS YEAR MKT VALUE	123,007

PERMIT NUM	DESCRIPTION	AMT	ISSUED
20102085	REMODEL	3,600	12/07/2010
20102086	H/AC	1,300	12/07/2010
20100464	ADDITION	4,500	03/19/2010
20100466	OTHER	1,000	03/19/2010
20100465	ELEC OTHER	300	03/18/2010
20100361	XFOB	450	02/26/2010

SALES DATA

OFF RECORD Number	DATE	TYPE INST	Q U	V I	RSN CD	SALE PRICE
1707/0429	10/28/2010	WD	U	I	11	200,000
GRANTOR: SYNOVUS BANK						
GRANTEE: HAMBROCK LUDGER						
1702/0123	9/29/2010	WD	U	I	12	179,700
GRANTOR: ROWE JASON N & SUSAN						
GRANTEE: SYNOVUS BANK						

BUILDING NOTES

BUILDING DIMENSIONS

BAS=[YR=1993] W48 S122 E19 ULP=[YR=1993] S7 E17
N65BAS=[YR=2014] N40 W12 S40 E12$ W12 S10CLP=[YR=2014]
S18E9N18W9 $W9S18E9S30W5$ E5 N98 E24 N24 $ PTR= E15
APT=[YR=1993] E24 S6 CAN=[YR=1993] E7 S30 W7 N30$ S30 W24
N36$ W15$.

EXTRA FEATURES

LN	OB/XF CODE	DESCRIPTION	BLD	CAP	L	W	UNITS	UT	Adj R	ADJ UNIT PRICE	ORIG COND	YEAR ON	YEAR ACTUAL	Q	% COND	OB/XF MKT VALUE	NOTES
1	0811	CONCRETE B	0	0	0	0	658.00	SF	5.20	5.20	100	1980	1980	3	35	1,198	
2	0812	CONCRETE C	0	0	0	0	1,399.00	SF	4.00	4.00	100	1995	1995	3	72	4,029	
3	0430	CL FNC 6B	0	0	0	0	61.00	LF	9.70	9.70	100	1995	1995	3	39	231	
4	6001	ROLLUP DR	0	0	0	0	2.00	UT	400.00	400.00	100	1995	1995	3	20	160	
5	1242	WD DECK A	0	0	0	0	84.00	SF	10.00	10.00	100	1995	1995	3	20	168	
6	0819	CONC 12"	0	0	14	8	112.00	SF	9.50	9.50	100	1995	1995	3	72	766	
7	0681	POLE SHED	0	0	17	9	153.00	SF	15.00	15.00	100	1999	1999	3	28	643	

LAND DESCRIPTION

TOTAL OB/XF 7,195

LN	USE CODE	CLS	LAND USE DESCRIPTION	CAP	RD	LOC ZONE	FRONT	DEPTH	TOT LND UTS	UNIT TYPE	DT	DPTH FACT	% COND	TOT ADJ	UNIT PRICE	ADJ UNIT PRICE	LAND VALUE	OTHER ADJUSTMENTS AND NOTES	YEAR	DENSITY	DECL	FRZ	YR	CONSRV
1	004800	C	WAREHOUSE	0	0003	I-1	50.00	125.00	6,250.00	SF		1.00	1.00	1.00	6.50	6.50	40,625							

REVIEW DATE 06/10/2021 BY KK Total Acres: 0.00 Total Land Value: 40,625 Market: 0 Agricultural: 0 Common: 40,625 PRINTED 08/02/2023 BY SYS