BLOCK 1 LOT 30 & E20.80' OF N
48.20 OF LOT 31 & W 4.20'OF N
18' OF LOT 31

RACHRIDGE LLC
PO BOX 16569
FERNANDINA BEACH, FL 32035

2023

00-00-31-1800-0001-0300

NASSAU COUNTY PROPERTY

BUILDING CHARACTERISTICS

ELEMENT	CD	CONSTRUCTION
Exterior Wall	19	COMMON BRK 100
Roof Structur	04	WOOD TRUSS 100
Roof Cover	04	BUILT-UP 100
Interior Wall	08	DECORATIVE 60
Interior Wall	05	DRYWALL 40
Interior Floo	11	CLAY TILE 50
Interior Floo	14	CARPET 50
Ceiling	02	F.NOT SUS 100
Air Condition	04	ROOF TOP 100
Heating Type	04	AIR DUCTED 100
Fixtures		20 100
Frame	03	MASONRY 100
Story Height		15 100
RMS		10 100
Stories	2.	2. 100
Units		0 100
BUD8 Adjustme	02	DIST FB 100
Occupancy	00	NONE 100
Quality	03	Quality Level 03
DOR CODE	3300	NIGHTCLUB/BARS
MAP NUM		MKT AREA 01
NEIGHBORHOOD/LOC	1002.0200	

AREA TYPE	TOTAL GROSS AREA	PCT OF BASE	TOT ADJ AREA	SUBAREA MARKET VALUE
AOF	2,500	100	2,500	193,863
BAS	2,116	100	2,116	164,085
BAS	1,080	100	1,080	83,749
BRA	144	110	158	12,252
BRA	136	110	150	11,632
BRG	288	125	360	27,916
CAN	18	30	5	388
SFB	78	80	62	4,808
TOTALS	6,360		6,431	498,692

MARKET ADJUSTMENTS

TYPE	MDL	EFF. AREA	TOT ADJ PTS	EFF. BASE RATE	REPL. COST NEW	AYB	EYB	ECON	FNCT		NORM	% COND
3301	04	6,431	124.8208	155.09	997,384	1878	1980	0	0	0	50.00	50.00

1 BARS – 0% - 0 Heated Area: 6326 HX Base Yr

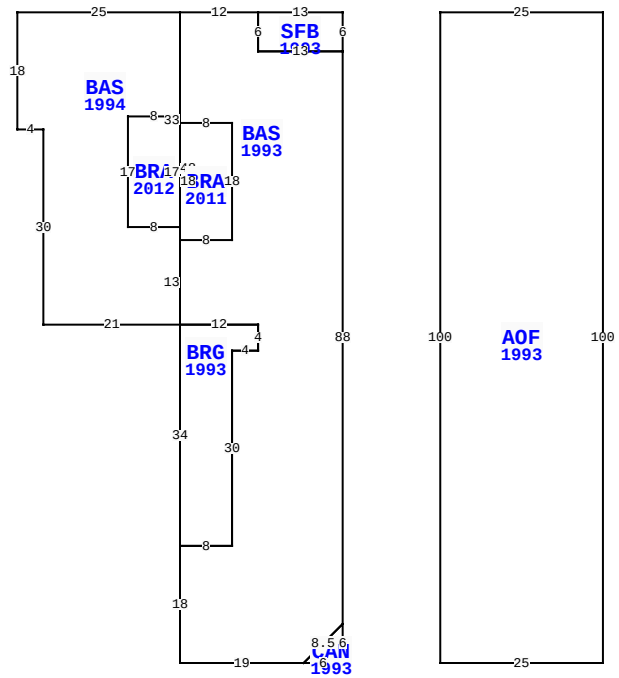

BLD DATE	11/23/2020 KK	LGL DATE	
XF DATE	11/23/2020 KK	LAND DATE	11/23/2020 KK
INC DATE		AG DATE	

117 CENTRE ST, FERNANDINA BEACH

VALUATION SUMMARY

VALUATION BY		STANDARD
Tax Group: 2	Tax Dist:	
BUILDING MARKET VALUE		498,692
TOTAL MARKET OB/XF VALUE		17,304
TOTAL LAND VALUE - MARKET		357,800
TOTAL MARKET VALUE		873,796
SOH/AGL Deduction		177,350
ASSESSED VALUE		696,446
TOTAL EXEMPTION VALUE	HI	0
BASE TAXABLE VALUE		696,446
TOTAL JUST VALUE		873,796
NCON VALUE		0
INCOME VALUE		
PREVIOUS YEAR MKT VALUE		788,206

PERMIT NUM	DESCRIPTION	AMT	ISSUED
20200071	REMODEL- REPAIR	20,000	07/16/2020
20160840	EXTERIOR WIRING	750	03/30/2016
20131933	AWNING	4,360	08/16/2013
20130916	GAS	400	04/25/2013
20130512	OTHER	250	03/14/2013
20130465	OTHER	1,650	03/07/2013

SALES DATA

OFF RECORD Number	DATE	TYPE INST	Q U /	V I /	RSN CD	SALE PRICE
1122/0006	3/17/2003	WD	Q	I		1,101,500
GRANTOR: JOHNSON RICHARD A						
GRANTEE: RACHRIDGE LLC						
0599/0905	6/14/1990	WD	U	I	09	800,000
GRANTOR: H A N CORP						
GRANTEE: JOHNSON RICHARD A						

BUILDING NOTES

BUILDING DIMENSIONS

SFB=[YR=1993] W13 BAS=[YR=1993] W12 BAS=[YR=1994] W25 S18 E4 S30 E21 BRG=[YR=1993] S34 E8 N30 E4 N4 W12$ N13 BRA=[YR=2011] E8 N18 W8 S18$ N2 BRA=[YR=2012] W8 N17 E8 S17$ N33$ S48 E12 S4 W4 S30 W8 S18 E19 CAN=[YR=1993] E6 N6 D6 L6 $ U6 R6 N88 W13 N6$ S6 E13 N6$ PTR= E15 AOF=[YR=1993] E25 S100 W25 N100 $ W15$.

EXTRA FEATURES

LN	OB/XF CODE	DESCRIPTION	BLD	CAP	L	W	UNITS	UT	Adj R	ADJ UNIT PRICE	ORIG COND	YEAR ON	YEAR ACTUAL	Q	% COND	OB/XF MKT VALUE	NOTES
3	0097	AWNING CN	0	0	0	0	17.00	SF	130.00	130.00	100	2000	2000	3	40	884	
4	0418	EXHST FAN	0	0	0	0	1.00	UT	800.00	800.00	100	2001	2001	3	20	160	
6	0966	FIRE SPRNK	0	0	0	0	6,342.00	SF	3.00	3.00	100	2000	2000	3	80	15,221	
8	0648	LIGHTS-AV	0	0	0	0	2.00	UT	140.00	140.00	100	2000	2000	3	20	56	
9	0097	AWNING CN	0	0	0	0	5.00	SF	65.00	65.00	100	2000	2000	3	40	130	
14	6002	EL ROLL DR	0	0	0	0	1.00	UT	900.00	900.00	100	2010	2010	3	50	450	
15	0978	SECURTY LT	0	0	0	0	1.00	UT	450.00	450.00	100	2010	2010	3	81	365	
16	0443	STK FNC 6'	0	0	0	0	19.00	LF	10.00	10.00	100	2000	2000	3	20	38	

LAND DESCRIPTION

TOTAL OB/XF 17,304

LN	USE CODE	CLS	LAND USE DESCRIPTION	CAP	RD	LOC ZONE	FRONT	DEPTH	TOT LND UTS	UNIT TYPE	DT	DPTH FACT	% COND	TOT ADJ	UNIT PRICE	ADJ UNIT PRICE	LAND VALUE	OTHER ADJUSTMENTS AND NOTES	YEAR	DENSITY	DECL	FRZ	YR	CONSRV
1	003300	C	NIGHT CLUB	0	0003	C-3	25.00	100.00	3,578.00	SF		1.00	1.00	1.00	100.00	100.00	357,800							

REVIEW DATE 11/23/2020 BY KK Total Acres: 0.00 Total Land Value: 357,800 Market: 0 Agricultural: 0 Common: 357,800 PRINTED 08/02/2023 BY SYS