BLOCK 1 LOTS 5 6 7
IN OR 1985/767
UTILITY ESMT IN OR 857/248

TSP PARTNERS LLC/
12 N FRONT ST
FERNANDINA BEACH, FL 32034

2023

00-00-31-1800-0001-0050

BUILDING CHARACTERISTICS

ELEMENT	CD	CONSTRUCTION
Exterior Wall	15	CONC BLOCK 100
Roof Structur	04	WOOD TRUSS 100
Roof Cover	12	MODULAR MT 80
Roof Cover	04	BUILT-UP 20
Interior Wall	05	DRYWALL 80
Interior Wall	08	DECORATIVE 20
Interior Floo	03	CONC FINSH 80
Interior Floo	15	HARDTILE 20
Ceiling	03	PART.FIN. 100
Air Condition	03	CENTRAL 100
Heating Type	04	AIR DUCTED 100
Fixtures		20 100
Frame	03	MASONRY 100
Story Height		13 100
RMS		5 100
Stories	1.5	1.5 100
Units		0 100
BUD8 Adjustme	02	DIST FB 100
Quality	00	QUALITY Level 03
Occupancy	00	OCCUPANCY 100

DOR CODE	2100	RESTAURANTS/CAFE	
MAP NUM		MKT AREA	01
NEIGHBORHOOD/LOC	1005.0400		

AREA TYPE	TOTAL GROSS AREA	PCT OF BASE	TOT ADJ AREA	SUBAREA MARKET VALUE
BAS	80	100	80	12,418
BAS	216	100	216	33,530
BAS	235	100	235	36,479
BAS	657	100	657	101,987
BAS	2,210	100	2,210	343,062
CAN	45	30	14	2,174
CAN	264	30	79	12,263
CAN	848	30	254	39,429
CAN	848	30	254	39,429
STR	99	10	10	1,552
TOTALS	5,617		4,021	624,188

MARKET ADJUSTMENTS

TYPE	MDL	EFF. AREA	TOT ADJ PTS	EFF. BASE RATE	REPL. COST NEW	AYB	EYB	ECON	FNCT		NORM	% COND
2101	04	4,021	109.4725	194.04	780,235	1962	2000	0	0	0	20.00	80.00

1 RSTARANT 1 – 0% - 0 Heated Area: 3398 HX Base Yr

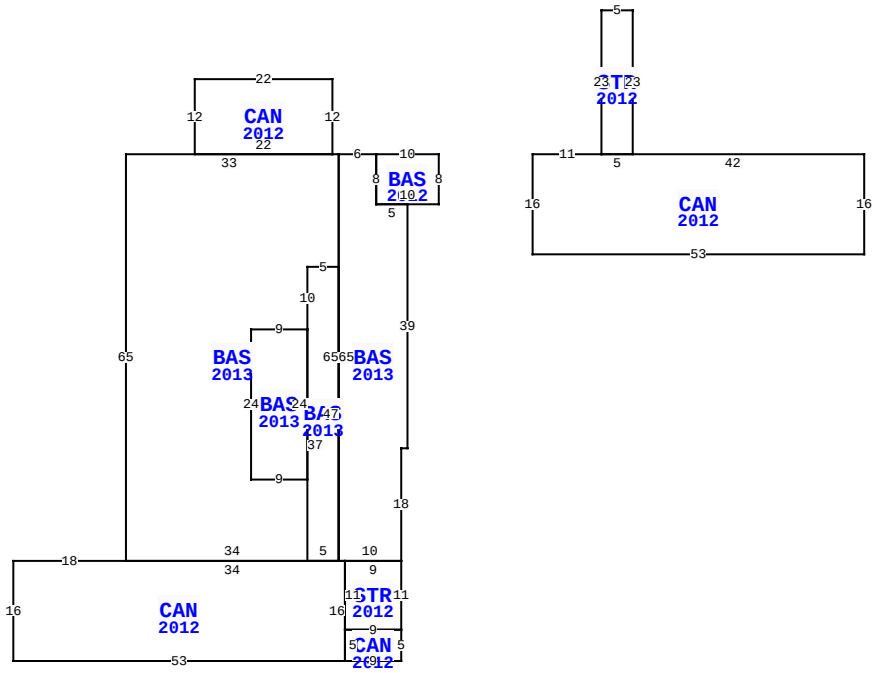

** This building has 11 Sub-Areas

12 N FRONT ST, FERNANDINA BEACH

BLD DATE	07/01/2022	KK	LGL DATE	
XF DATE	07/01/2022	KK	LAND DATE	07/01/2022 KK
INC DATE			AG DATE	

NASSAU COUNTY PROPERTY

PAGE 1 of 2 2

VALUATION SUMMARY

VALUATION BY	STANDARD
Tax Group: 2	Tax Dist:
BUILDING MARKET VALUE	624,188
TOTAL MARKET OB/XF VALUE	53,539
TOTAL LAND VALUE - MARKET	450,000
TOTAL MARKET VALUE	1,127,727
SOH/AGL Deduction	382,418
ASSESSED VALUE	745,309
TOTAL EXEMPTION VALUE	0
BASE TAXABLE VALUE	745,309
TOTAL JUST VALUE	1,127,727
NCON VALUE	0
INCOME VALUE	
PREVIOUS YEAR MKT VALUE	948,709

PERMIT NUM	DESCRIPTION	AMT	ISSUED
20230020	EPOXY ROOF		06/20/2023
20210243	REMODEL-KITCHEN	31,876	01/05/2022
B190014	XFOB	2,200	01/04/2018
20160493	COOLER BOX ONLY	2,400	02/25/2016
20160255	CC SLAB & COOLER	14,000	02/12/2016
20150676	COOLER	800	03/31/2015

SALES DATA

OFF RECORD Number	DATE	TYPE INST	Q U	V I	RSN CD	SALE PRICE
1985/0767	6/10/2015	WD	U	I	40	518,500
GRANTOR: RTJC PROPERTIES LLC						
GRANTEE: TSP PARTNERS LLC						
1775/1211	1/25/2012	WD	Q	I	02	475,000
GRANTOR: TPAW LLC						
GRANTEE: RTJC PROPERTIES LLC						

BUILDING NOTES

BUILDING DIMENSIONS

BAS=[YR=2012] W10 BAS=[YR=2013] W6 BAS=[YR=2013] W1 CAN=[YR=2012] N12 W22 S12 E22$ W33 S65 CAN=[YR=2012] W18 S16 E53 CAN=[YR=2012] E9 N5 STR=[YR=2012] N11 W9 S11 E9$ W9 S5$ N16 W1 BAS=[YR=2013] N47 W5 S10 BAS=[YR=2013] W9 S24 E9 N24$ S37 E5 $ W34$ E34 N65$ S65 E10 N18 E1 N39 W5 N8$ S8 E10 N8$ PTR=E15 CAN=[YR=2012] E11 STR=[YR=2012] N23 E5 S23 W5$ E42 S16 W53 N16$W15$.

EXTRA FEATURES

LN	OB/XF CODE	DESCRIPTION	BLD	CAP	L	W	UNITS	UT	Adj R	ADJ UNIT PRICE	ORIG COND	YEAR ON	YEAR ACTUAL	Q	% COND	OB/XF MKT VALUE	NOTES
5	0825	BRICK	0	0	0	0	798.00	SF	12.50	12.50	100	2012	2012	3	98	9,776	
6	0811	CONCRETE B	0	0	0	0	565.00	SF	5.20	5.20	100	2012	2012	3	94	2,762	
7	1242	WD DECK A	0	0	0	0	194.00	SF	10.00	10.00	100	2012	2012	3	60	1,164	
8	0810	CONCRETE A	0	0	76	5	380.00	SF	6.50	6.50	100	2012	2012	3	94	2,322	
9	0978	SECURTY LT	0	0	0	0	10.00	UT	450.00	450.00	100	2012	2012	3	85	3,825	
10	0648	LIGHTS-AV	0	0	0	0	8.00	UT	140.00	140.00	100	2012	2012	3	60	672	
11	0381	COOLER	0	0	0	0	192.00	SF	82.50	82.50	100	2012	2012	3	72	11,405	
12	0383	FREEZER	0	0	8	8	64.00	SF	105.00	105.00	100	2012	2012	3	72	4,838	
14	0964	HALON SYST	0	0	10	3	30.00	SF	50.00	50.00	100	2012	2012	3	94	1,410	
16	0418	EXHST FAN	0	0	0	0	2.00	UT	400.00	400.00	100	2012	2012	3	60	480	

TOTAL OB/XF 38,654

LAND DESCRIPTION

LN	USE CODE	CLS	LAND USE DESCRIPTION	CAP	RD	LOC ZONE	FRONT	DEPTH	TOT LND UTS	UNIT TYPE	DT	DPTH FACT	% COND	TOT ADJ	UNIT PRICE	ADJ UNIT PRICE	LAND VALUE	OTHER ADJUSTMENTS AND NOTES	YEAR	DENSITY	DECL	FRZ	YR	CONSRV
1	002100	C	RESTAURANT	0	0006	C-3	75.00	125.00	7,500.00	SF		1.00	1.00	1.00	60.00	60.00	450,000							

REVIEW DATE 07/01/2022 BY KK Total Acres: 0.00 Total Land Value: 450,000 Market: 0 Agricultural: 0 Common: 450,000 PRINTED 08/02/2023 BY SYS

BLOCK 1 LOTS 5 6 7
IN OR 1985/767
UTILITY ESMT IN OR 857/248

TSP PARTNERS LLC/
12 N FRONT ST
FERNANDINA BEACH, FL 32034

2023

00-00-31-1800-0001-0050

NASSAU COUNTY PROPERTY

BUILDING CHARACTERISTICS

ELEMENT	CD	CONSTRUCTION

DOR CODE	2100	RESTAURANTS/CAFE	
MAP NUM		MKT AREA	01
NEIGHBORHOOD/LOC	1005.0400		

AREA TYPE	TOTAL GROSS AREA	PCT OF BASE	TOT ADJ AREA	SUBAREA MARKET VALUE
TOTALS				

MARKET ADJUSTMENTS

TYPE	MDL	EFF. AREA	TOT ADJ PTS	EFF. BASE RATE	REPL. COST NEW	AYB	EYB	ECON	FNCT		NORM	% COND

BLD DATE	07/01/2022	KK	LGL DATE
XF DATE	07/01/2022	KK	LAND DATE 07/01/2022 KK
INC DATE			AG DATE

VALUATION SUMMARY

VALUATION BY	STANDARD
Tax Group: 2	Tax Dist:
BUILDING MARKET VALUE	624,188
TOTAL MARKET OB/XF VALUE	53,539
TOTAL LAND VALUE - MARKET	450,000
TOTAL MARKET VALUE	1,127,727
SOH/AGL Deduction	382,418
ASSESSED VALUE	745,309
TOTAL EXEMPTION VALUE	0
BASE TAXABLE VALUE	745,309
TOTAL JUST VALUE	1,127,727
NCON VALUE	0
INCOME VALUE	
PREVIOUS YEAR MKT VALUE	948,709

PERMIT NUM	DESCRIPTION	AMT	ISSUED
20150665	COOLER	18,000	03/30/2015
20121889	SIGN	0	09/11/2012
20121586	SIGN	349	08/06/2012
20121378	INSTALL IRRIG SYS	2,500	07/11/2012
20121321	FIRE SUPPR SYSTEM	1,900	07/03/2012
20121149	PIPING FOR KITCHE	2,000	06/15/2012

SALES DATA

OFF RECORD Number	DATE	TYPE INST	Q U /	V I /	RSN CD	SALE PRICE
1985/0767	6/10/2015	WD	U	I	40	518,500
GRANTOR: RTJC PROPERTIES LLC						
GRANTEE: TSP PARTNERS LLC						
1775/1211	1/25/2012	WD	Q	I	02	475,000
GRANTOR: TPAW LLC						
GRANTEE: RTJC PROPERTIES LLC						

BUILDING NOTES

BUILDING DIMENSIONS

EXTRA FEATURES

LN	OB/XF CODE	DESCRIPTION	BLD	CAP	L	W	UNITS	UT	Adj R	ADJ UNIT PRICE	ORIG COND	YEAR ON	YEAR ACTUAL	Q	% COND	OB/XF MKT VALUE	NOTES
17	0446	BOX FNC 6'	0	0	0	0	124.00	LF	20.00	20.00	100	2016	2016	3	78	1,934	
18	0463	FENCE GATE	0	0	0	0	1.00	UT	300.00	300.00	100	2016	2016	3	92	276	
19	1076	TRELLIS A	0	0	12	6	72.00	SF	7.50	7.50	100	2014	2014	3	78	421	
20	0855	CONC PAVER	0	0	62	4	248.00	SF	10.00	10.00	100	2014	2014	3	95	2,356	
21	0383	FREEZER	0	0	12	8	96.00	SF	105.00	105.00	100	2016	2016	3	90	9,072	
22	0940	SHEDS/PORT	0	0	8	4	32.00	SF	30.00	30.00	100	2018	2018	3	86	826	

LAND DESCRIPTION

TOTAL OB/XF 14,885

LN	USE CODE	CLS	LAND USE DESCRIPTION	CAP	RD	LOC ZONE	FRONT	DEPTH	TOT LND UTS	UNIT TYPE	DT	DPTH FACT	% COND	TOT ADJ	UNIT PRICE	ADJ UNIT PRICE	LAND VALUE	OTHER ADJUSTMENTS AND NOTES	YEAR	DENSITY	DECL	FRZ	YR	CONSRV

REVIEW DATE 07/01/2022 BY KK Total Acres: 0.00 Total Land Value: 450,000 Market: 0 Agricultural: 0 Common: 450,000 PRINTED 08/02/2023 BY SYS