S-4 OF TRACT A
IN OR 2505/962
SOUTH BEACH SUB PB 3/11

LAWHORN BONNIE F &/FREDERICK APRIL LYNN ET AL
3105 FIRST AVE B
FERNANDINA BEACH, FL 32034

2023

00-00-31-1720-000A-0040

BUILDING CHARACTERISTICS

ELEMENT	CD	CONSTRUCTION
Exterior Wall	10	ABOVE AVG 100
Roof Structur	03	GABLE/HIP 100
Roof Cover	03	COMP SHNGL 100
Interior Wall	05	DRYWALL 100
Interior Floo	14	CARPET 80
Interior Floo	13	LVT/LAMNT 20
Air Condition	03	CENTRAL 100
Heating Type	04	AIR DUCTED 100
Bedrooms		6 100
Bathrooms		5 100
Frame	02	WOOD FRAME 100
Stories	2.	2. 100
Units		0 100
Occupancy	00	NONE 100
Quality	03	Quality Level 03
DOR CODE	0800	MULTI-FAMILY
MAP NUM		MKT AREA 01
NEIGHBORHOOD/LOC	1043.00	

AREA TYPE	TOTAL GROSS AREA	PCT OF BASE	TOT ADJ AREA	SUBAREA MARKET VALUE
BAS	670	100	670	70,099
FGR	351	55	193	20,193
FOP	15	30	4	419
FOP	25	30	8	837
FOP	144	30	43	4,499
FST	35	55	19	1,988
FUS	1,046	100	1,046	109,438
HXB	670	100	670	70,099
HXB	1,046	100	1,046	109,438
HXG	351	55	193	20,193
TOTALS	5,086		4,014	419,967

MARKET ADJUSTMENTS

TYPE	MDL	EFF. AREA	TOT ADJ PTS	EFF. BASE RATE	REPL. COST NEW	AYB	EYB	ECON	FNCT		NORM	% COND
2700	01	4,014	98.0320	116.90	469,237	2000	2000	0	0	0	10.50	89.50

1 DUPLEX – 49.58% - 2022 Heated Area: 3432 HX Base Yr 2022

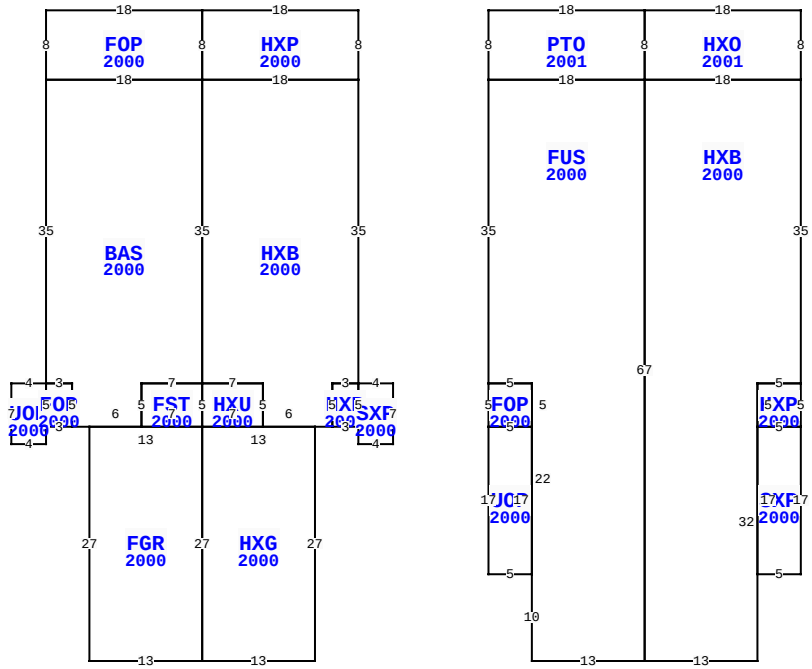

** This building has 20 Sub-Areas

3105 1ST AVE, FERNANDINA BEACH

BLD DATE		LGL DATE	
XF DATE		LAND DATE	
INC DATE		AG DATE	

NASSAU COUNTY PROPERTY

PAGE 1 of 1 2

VALUATION SUMMARY

VALUATION BY		STANDARD
Tax Group: 2	Tax Dist:	
BUILDING MARKET VALUE		419,967
TOTAL MARKET OB/XF VALUE		6,924
TOTAL LAND VALUE - MARKET		200,000
TOTAL MARKET VALUE		626,891
SOH/AGL Deduction		115,755
ASSESSED VALUE		511,136
TOTAL EXEMPTION VALUE	HX HB	50,000
BASE TAXABLE VALUE		461,136
TOTAL JUST VALUE		626,891
NCON VALUE		0
INCOME VALUE		
PREVIOUS YEAR MKT VALUE		536,633

PERMIT NUM	DESCRIPTION	AMT	ISSUED
20100273	REPAIR/RRF	800	02/10/2010
B990999	NEW CONSTR	107,284	08/09/1999

SALES DATA

OFF RECORD Number	DATE	TYPE INST	Q / U	V / I	RSN CD	SALE PRICE
2505/0962	10/14/2021	QC	U	I	11	100
GRANTOR: LAWHORN BONNIE F & DA						
GRANTEE: LAWHORN BONNIE F &						
0824/1333	3/02/1998	WD	Q	V		29,000
GRANTOR: WALKER WILLIAM DAVID						
GRANTEE: FREDERICK BONNIE F						

BUILDING NOTES

BUILDING DIMENSIONS

HXP=[YR=2000] W18 FOP=[YR=2000] W18S8 BAS=[YR=2000] S35 UOP=[YR=2000] W4S7E4N2 FOP=[YR=2000] E3N5W3S5$ N5$ E3S5E2 FGR=[YR=2000] S27E13 HXG=[YR=2000] E13 N27 HXB=[YR=2000] E2 HXP=[YR=2000] E3 SXP=[YR=2000] S2E4N7W4S5$ N5W3S5$ N5E3N35W18 S35 FST=[YR=2000] W7S5E7 HXU=[YR=2000] E7 N5W7S5$ N5$ E7S5E6$ W13 S27$ N27W13$ E6N5E7N35W18$ E18N8$ S8E18N8$ PTR=E15 PTO=[YR=2001] E18 HXO=[YR=2001] E18S8 HXB=[YR=2000] S35 HXP=[YR=2000] S5 SXP=[YR=2000] S17W5N17E5$ W5N5E5$ W5S32W13 FUS=[YR=2000] W13 N10 UOP=[YR=2000] W5N17 FOP=[YR=2000] N5E5 S5W5$ E5S17$ N22W5N35E18S67$ N67E18$ W18N8$ S8W18N8$ W15$.

EXTRA FEATURES

LN	OB/XF CODE	DESCRIPTION	BLD	CAP	L	W	UNITS	UT	Adj R	ADJ UNIT PRICE	ORIG COND	YEAR ON	YEAR ACTUAL	Q	% COND	OB/XF MKT VALUE	NOTES
1	0812	CONCRETE C	0	100	0	0	1,663.00	SF	4.00	4.00	100	2000	2000	3	80	5,322	
2	0810	CONCRETE A	0	100	0	0	260.00	SF	6.50	6.50	100	2000	2000	3	80	1,352	
3	0810	CONCRETE A	0	100	0	0	48.00	SF	6.50	6.50	100	2000	2000	3	80	250	

LAND DESCRIPTION

TOTAL OB/XF 6,924

LN	USE CODE	CLS	LAND USE DESCRIPTION	CAP	RD	LOC ZONE	FRONT	DEPTH	TOT LND UTS	UNIT TYPE	DT	DPTH FACT	% COND	TOT ADJ	UNIT PRICE	ADJ UNIT PRICE	LAND VALUE	OTHER ADJUSTMENTS AND NOTES	YEAR	DENSITY	DECL	FRZ	YR	CONSRV
1	000800	C	MULTI-FAM	100			50.00	120.00	50.00	FF		1.00	1.00	1.00	4,000.00	4,000.00	200,000							

REVIEW DATE 05/31/2018 BY DJX Total Acres: 0.00 Total Land Value: 200,000 Market: 0 Agricultural: 0 Common: 200,000 PRINTED 08/02/2023 BY SYS