BLOCK 2 LOT 1
SOUTH BEACH SUB PB 3/11

GREEN TURTLE INVESTMENTS LLC
390 BELL TELEPHONE RD
HAZELHURST, GA 31539

2023

00-00-31-1720-0002-0010

BUILDING CHARACTERISTICS

ELEMENT	CD	CONSTRUCTION
Exterior Wall	17	CB STUCCO 100
Roof Structur	12	REINFO/CON 100
Roof Cover	02	ROLL COMP 100
Interior Wall	05	DRYWALL 100
Interior Floo	15	HARDTILE 100
Air Condition	03	CENTRAL 100
Heating Type	04	AIR DUCTED 100
Bedrooms		5 100
Bathrooms		8 100
Frame	03	MASONRY 100
Stories	3.	3. 100
Units		0 100
Quality	03	Quality Level 03

DOR CODE 0800 MULTI-FAMILY
MAP NUM | MKT AREA 01
NEIGHBORHOOD/LOC 1052.00

AREA TYPE	TOTAL GROSS AREA	PCT OF BASE	TOT ADJ AREA	SUBAREA MARKET VALUE
BAL	252	15	38	8,461
BAS	160	100	160	35,627
BAS	254	100	254	56,558
FOP	126	30	38	8,461
FOP	240	30	72	16,032
FOP	390	30	117	26,052
FOP	390	30	117	26,052
FST	42	55	23	5,121
FST	56	55	31	6,902
FST	56	55	31	6,902
TOTALS	18,016		10,859	2,417,943

MARKET ADJUSTMENTS

TYPE	MDL	EFF. AREA	TOT ADJ PTS	EFF. BASE RATE	REPL. COST NEW	AYB	EYB	ECON	FNCT		NORM	% COND
2700	12	10,859	198.6450	236.88	2,572,280	2008	2010	0	0	0	6.00	94.00

2 DUPLEX – 0% - 0 Heated Area: 7438 HX Base Yr

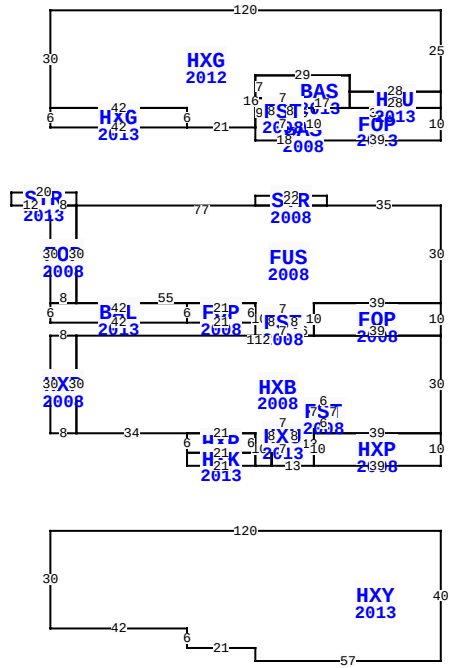

** This building has 23 Sub-Areas

3036 S FLETCHER AVE, FERNANDINA BEACH

BLD DATE		LGL DATE	
XF DATE		LAND DATE	
INC DATE		AG DATE	

NASSAU COUNTY PROPERTY

PAGE 1 of 2 2

VALUATION SUMMARY

VALUATION BY	STANDARD
Tax Group: 2	Tax Dist:
BUILDING MARKET VALUE	2,417,943
TOTAL MARKET OB/XF VALUE	170,931
TOTAL LAND VALUE - MARKET	750,000
TOTAL MARKET VALUE	3,338,874
SOH/AGL Deduction	38,561
ASSESSED VALUE	3,300,313
TOTAL EXEMPTION VALUE	0
BASE TAXABLE VALUE	3,300,313
TOTAL JUST VALUE	3,338,874
NCON VALUE	0
INCOME VALUE	
PREVIOUS YEAR MKT VALUE	3,299,286

PERMIT NUM	DESCRIPTION	AMT	ISSUED
20152915	POOL	130,000	12/16/2015
20130652	SVC SEP	11,000	04/01/2013
20130471	H/AC	3,000	03/08/2013
20130481	DUNEWALK	25,000	03/08/2013
20130416	REMODEL	161,700	03/01/2013
20130093	DEMOLITION	6,000	01/14/2013

SALES DATA

OFF RECORD Number	DATE	TYPE INST	Q / U	V / I	RSN CD	SALE PRICE
2418/0400	12/18/2020	WD	Q	I	01	3,050,000
GRANTOR: WARD DANIEL T LIVING						
GRANTEE: GREEN TURTLE INVEST						
1831/1753	12/21/2012	WD	Q	I	02	1,400,000
GRANTOR: HERITAGE BANK OF NORT						
GRANTEE: WARD DANIEL T TRUST						

BUILDING NOTES

BUILDING DIMENSIONS

HXG=[YR=2012] W120 S30 HXG=[YR=2013] S6 E42 N6 W42$ E42 S6 E21 BAS=[YR=2008] S4 E18 FOP=[YR=2013] E39 N10 HXU=[YR=2013] N5 W28 BAS=[YR=2013] N5 W29 S7 E5 FST=[YR=2008] S8 E7 N8 W7$ E7 S3 E17 N5$ S5 E28$ W39 S10$ N10 W6 S5 W7 N8 W5S9$N16 E29 S5 E28 N25$ PTR=S60 FUS=[YR=2008] W35 STR=[YR=2008] N3W22 S3E22$ W77 STR=[YR=2013] N4 W20 S4 E12 FOP=[YR=2008] S30 BAL=[YR=2013] S6 E42 FOP=[YR=2008] E21 N6 W21 S6$ N6 W42$ E8 N30 W8$ E8$ S30 E55 S10 E5 FST=[YR=2008] E7 N8 W7 S8$N8E7S8E6 FOP=[YR=2008] E39 N10W39S10$ N10E39 N30$ N60$ PTR=S100HXB=[YR=2008] W112HXP=[YR=2008] W8 S30E8N30$ S30E34 HXP=[YR=2008] S6 HXK=[YR=2013] S4 E21N4W21$E21N6W21$ E21S10E5 N5 HXU=[YR=2013] N8E7S8W7$ S5 E13 HXP=[YR=2008]

EXTRA FEATURES

LN	OB/XF CODE	DESCRIPTION	BLD	CAP	L	W	UNITS	UT	Adj R	ADJ UNIT PRICE	ORIG COND	YEAR ON	YEAR ACTUAL	Q	% COND	OB/XF MKT VALUE	NOTES
1	0861	POOL GUNIT	0	0	0	0	630.00	SF	127.50	127.50	100	2016	2016	3	84	67,473	
2	0855	CONC PAVER	0	0	0	0	1,350.00	SF	20.00	20.00	100	2016	2016	3	97	26,190	
3	0462	ST/AL FNC	0	0	0	0	176.00	SF	10.00	10.00	100	2016	2016	3	84	1,478	
4	1126	CB/STC 8"	0	0	0	0	540.00	SF	8.00	8.00	100	2016	2016	3	97	4,190	
5	0871	POOL HTR R	0	0	0	0	1.00	UT	2,000.00	2,000.00	100	2016	2016	3	78	1,560	
10	0476	VF 6 SBPL	0	0	0	0	42.00	LF	32.00	32.00	100	2008	2008	3	76	1,021	
12	0410	ELEVATOR	0	0	0	0	1.00	UT	30,000.00	30,000.00	100	2008	2008	3	100	30,000	
13	0855	CONC PAVER	0	0	0	0	113.00	SF	7.00	7.00	100	2013	2013	3	95	751	
14	0855	CONC PAVER	0	0	0	0	247.00	SF	7.00	7.00	100	2013	2013	3	95	1,643	
15	0855	CONC PAVER	0	0	0	0	136.00	SF	7.00	7.00	100	2013	2013	3	95	904	

TOTAL OB/XF 135,210

LAND DESCRIPTION

LN	USE CODE	CLS	LAND USE DESCRIPTION	CAP	RD	LOC ZONE	FRONT	DEPTH	TOT LND UTS	UNIT TYPE	DT	DPTH FACT	% COND	TOT ADJ	UNIT PRICE	ADJ UNIT PRICE	LAND VALUE	OTHER ADJUSTMENTS AND NOTES	YEAR	DENSITY	DECL	FRZ	YR	CONSRV
1	000120	C	SFR OCN FT	0		R-3	50.00	350.00	50.00	FF		1.00	1.00	1.00	15,000.00	15,000.00	750,000							

REVIEW DATE 01/14/2021 BY KBA Total Acres: 0.00 Total Land Value: 750,000 Market: 0 Agricultural: 0 Common: 750,000 PRINTED 08/02/2023 BY SYS

BLOCK 2 LOT 1
SOUTH BEACH SUB PB 3/11

GREEN TURTLE INVESTMENTS LLC
390 BELL TELEPHONE RD
HAZELHURST, GA 31539

2023

00-00-31-1720-0002-0010

NASSAU COUNTY PROPERTY

BUILDING CHARACTERISTICS

ELEMENT	CD	CONSTRUCTION

DOR CODE	0800	MULTI-FAMILY	
MAP NUM		MKT AREA	01
NEIGHBORHOOD/LOC	1052.00		

AREA TYPE	TOTAL GROSS AREA	PCT OF BASE	TOT ADJ AREA	SUBAREA MARKET VALUE
TOTALS				

MARKET ADJUSTMENTS

TYPE	MDL	EFF. AREA	TOT ADJ PTS	EFF. BASE RATE	REPL. COST NEW	AYB	EYB	ECON	FNCT		NORM	% COND

VALUATION SUMMARY

VALUATION BY	STANDARD
Tax Group: 2	Tax Dist:
BUILDING MARKET VALUE	2,417,943
TOTAL MARKET OB/XF VALUE	170,931
TOTAL LAND VALUE - MARKET	750,000
TOTAL MARKET VALUE	3,338,874
SOH/AGL Deduction	38,561
ASSESSED VALUE	3,300,313
TOTAL EXEMPTION VALUE	0
BASE TAXABLE VALUE	3,300,313
TOTAL JUST VALUE	3,338,874
NCON VALUE	0
INCOME VALUE	
PREVIOUS YEAR MKT VALUE	3,299,286

PERMIT NUM	DESCRIPTION	AMT	ISSUED
20071786	H/AC	10,681	09/24/2007
20071758	OTHER	74,000	09/17/2007
20071510	H/AC	26,000	08/14/2007
20071515	ELEC OTHER	0	08/14/2007
20071264	XFOB	2,650	07/10/2007
20071231	GAS	3,800	07/03/2007

SALES DATA

OFF RECORD Number	DATE	TYPE INST	Q / U	V / I	RSN CD	SALE PRICE
2418/0400	12/18/2020	WD	Q	I	01	3,050,000
GRANTOR: WARD DANIEL T LIVING						
GRANTEE: GREEN TURTLE INVEST						
1831/1753	12/21/2012	WD	Q	I	02	1,400,000
GRANTOR: HERITAGE BANK OF NORT						
GRANTEE: WARD DANIEL T TRUST						

BLD DATE		LGL DATE	
XF DATE		LAND DATE	
INC DATE		AG DATE	

BUILDING NOTES

BUILDING DIMENSIONS

EXTRA FEATURES

LN	OB/XF CODE	DESCRIPTION	BLD	CAP	L	W	UNITS	UT	Adj R	ADJ UNIT PRICE	ORIG COND	YEAR ON	YEAR ACTUAL	Q	% COND	OB/XF MKT VALUE	NOTES
16	1243	WD DECK F	0	0	0	0	644.00	SF	8.00	8.00	100	2013	2013	3	65	3,349	
17	0416	DUNEWALKS	0	0	314	6	1,884.00	SF	15.00	15.00	100	2013	2013	3	65	18,369	
18	0463	FENCE GATE	0	0	0	0	3.00	UT	300.00	300.00	100	2013	2013	3	87	783	
19	1126	CB/STC 8"	0	0	0	0	866.00	SF	8.00	8.00	100	2013	2013	3	95	6,582	
20	0462	ST/AL FNC	0	0	295	0	885.00	SF	10.00	10.00	100	2013	2013	3	75	6,638	

LAND DESCRIPTION

TOTAL OB/XF 35,721

LN	USE CODE	CLS	LAND USE DESCRIPTION	CAP	RD	LOC ZONE	FRONT	DEPTH	TOT LND UTS	UNIT TYPE	DT	DPTH FACT	% COND	TOT ADJ	UNIT PRICE	ADJ UNIT PRICE	LAND VALUE	OTHER ADJUSTMENTS AND NOTES	YEAR	DENSITY	DECL	FRZ	YR	CONSRV

REVIEW DATE 01/14/2021 BY KBA Total Acres: 0.00 Total Land Value: 750,000 Market: 0 Agricultural: 0 Common: 750,000 PRINTED 08/02/2023 BY SYS