N1/2 OF LOT 4 (UNIT#B) &
S1/2 OF LOT 4 (UNIT A)
IN OR 1416/115

DILLINGHAM GREGG & JILL
835 TARPON AV
FERNANDINA BEACH, FL 32034

2023

00-00-31-1700-0004-0010

NASSAU COUNTY PROPERTY

BUILDING CHARACTERISTICS

ELEMENT	CD	CONSTRUCTION
Exterior Wall	14	WD SHINGLE 50
Exterior Wall	23	REINF CONC 50
Roof Structur	03	GABLE/HIP 100
Roof Cover	02	ROLL COMP 100
Interior Wall	05	DRYWALL 100
Interior Floo	12	HARDWOOD 50
Interior Floo	15	HARDTILE 50
Air Condition	03	CENTRAL 100
Heating Type	04	AIR DUCTED 100
Bedrooms		4 100
Bathrooms		3 100
Frame	03	MASONRY 100
Stories	2.	2. 100
Units		0 100
Occupancy	00	NONE 100
Quality	03	Quality Level 03
DOR CODE	0100	SINGLE FAMILY
MAP NUM		MKT AREA 01
NEIGHBORHOOD/LOC	1041.0100	

AREA TYPE	TOTAL GROSS AREA	PCT OF BASE	TOT ADJ AREA	SUBAREA MARKET VALUE
BAS	480	100	480	55,540
BAS	480	100	480	55,540
BAS	120	100	120	13,885
BAS	160	100	160	18,514
BAS	120	100	120	13,885
BAS	160	100	160	18,514
DCK	70	10	7	810
FUS	480	100	480	55,540
FUS	480	100	480	55,540
FUS	120	100	120	13,885
TOTALS	3,454		3,122	361,243

MARKET ADJUSTMENTS

TYPE	MDL	EFF. AREA	TOT ADJ PTS	EFF. BASE RATE	REPL. COST NEW	AYB	EYB	ECON	FNCT		NORM	% COND
0900	01	3,122	109.4800	130.01	405,891	1981	2000	0	0	0	11.00	89.00

1 SNGL FAM – 100% - 2009 Heated Area: 3040 HX Base Yr 2009

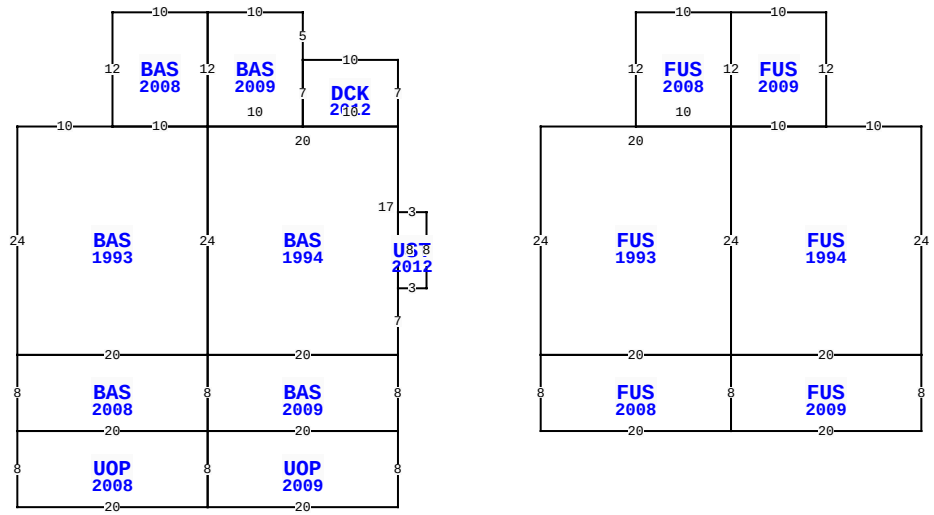

** This building has 16 Sub-Areas

835 TARPON AVE, FERNANDINA BEACH

BLD DATE		LGL DATE	
XF DATE		LAND DATE	
INC DATE		AG DATE	

VALUATION SUMMARY

VALUATION BY		STANDARD
Tax Group: 2	Tax Dist:	
BUILDING MARKET VALUE		361,243
TOTAL MARKET OB/XF VALUE		6,109
TOTAL LAND VALUE - MARKET		300,000
TOTAL MARKET VALUE		667,352
SOH/AGL Deduction		357,618
ASSESSED VALUE		309,734
TOTAL EXEMPTION VALUE	HX HB	50,000
BASE TAXABLE VALUE		259,734
TOTAL JUST VALUE		667,352
NCON VALUE		0
INCOME VALUE		
PREVIOUS YEAR MKT VALUE		560,373

PERMIT NUM	DESCRIPTION	AMT	ISSUED
20100860	REMODEL	1,000	05/25/2010
20071366	ADDITION	5,000	07/24/2007
20071368	REMODEL	250	07/24/2007
20071368	REPAIR/RRF	2,000	07/24/2007

SALES DATA

OFF RECORD Number	DATE	TYPE INST	Q U	V I	RSN CD	SALE PRICE
1416/0115	5/31/2006	WD	U	I	01	100
GRANTOR: TURCOTTE JILL						
GRANTEE: DILLINGHAM GREGG &						
1262/1922	10/01/2004	WD	Q	I		153,000
GRANTOR: BRANTLEY MARIA P DELM						
GRANTEE: TURCOTTE JILL						

BUILDING NOTES

BUILDING DIMENSIONS

DCK=[YR=2012] W10 BAS=[YR=2009] N5W10 BAS=[YR=2008] W10S12 BAS=[YR=1993] W10 S24 BAS=[YR=2008] S8 UOP=[YR=2008] S8E20 UOP=[YR=2009] E20N8 BAS=[YR=2009] N8 BAS=[YR=1994] N7 UST=[YR=2012] E3N8W3S8$ N17W20S24E20$ W20S8E20$ W20S8$ N8W20$E20N8W20$E20N24W10$E10 N12$ S12E10N7$ S7E10N7$ PTR= E15S7 FUS=[YR=1993] S24 FUS=[YR=2008] S8 E20 FUS=[YR=2009] E20N8 FUS=[YR=1994] N24 W10 FUS=[YR=2009] N12W10 FUS=[YR=2008] W10 S12E10N12$ S12E10$ W10S24E20$ W20S8$ N8W20$ E20N24W20$ N7W15 $.

EXTRA FEATURES

L N	OB/XF CODE	DESCRIPTION	BLD	CAP	L	W	UNITS	UT	Adj R	ADJ UNIT PRICE	ORIG COND	YEAR ON	YEAR ACTUAL	Q	% COND	OB/XF MKT VALUE	NOTES
1	0825	BRICK	0	100	44	40	1,760.00	SF	12.50	12.50	100	1950	1950	3	20	4,400	
2	0825	BRICK	0	100	0	0	105.00	SF	12.50	12.50	100	1950	1950	3	20	263	
3	0940	SHEDS/PORT	0	100	16	8	128.00	SF	30.00	30.00	100	2005	2005	3	27	1,037	
5	1076	TRELLIS A	0	100	31	4	124.00	SF	7.50	7.50	100	2005	2005	3	44	409	

LAND DESCRIPTION

TOTAL OB/XF 6,109

L N	USE CODE	CLS	LAND USE DESCRIPTION	CAP	R D	LOC ZONE	FRONT	DEPTH	TOT LND UTS	UNIT TYPE	D T	DPTH FACT	% COND	TOT ADJ	UNIT PRICE	ADJ UNIT PRICE	LAND VALUE	OTHER ADJUSTMENTS AND NOTES	YEAR	DENSITY	DECL	FRZ	YR	CONSRV
1	000100	C	SFR	100	0006	R-2	60.00	100.00	60.00	FF		1.00	1.00	1.00	5,000.00	5,000.00	300,000							

REVIEW DATE 04/30/2018 BY DJX Total Acres: 0.00 Total Land Value: 300,000 Market: 0 Agricultural: 0 Common: 300,000 PRINTED 08/02/2023 BY SYS