LOTS 41 42 & N8 FT OF 43 &
LOT 25 LESS S 28' & LOT 26
IN OR 1633/93-100 &

MUIR CELESTE HARDEE
3855 STEWART AVE
COCONUT GROVE, FL 33133

2023

00-00-31-1690-0041-0000

BUILDING CHARACTERISTICS

ELEMENT	CD	CONSTRUCTION
Exterior Wall	17	CB STUCCO 100
Roof Structur	03	GABLE/HIP 100
Roof Cover	03	COMP SHNGL 100
Interior Wall	03	PLASTER 100
Interior Floo	12	HARDWOOD 100
Air Condition	03	CENTRAL 100
Heating Type	04	AIR DUCTED 100
Bedrooms		3 100
Bathrooms		2.5 100
Frame	04	REIN CONC 100
Stories	1.	1. 100
Units		0 100
BUD8 Adjustme	02	DIST FB 100
Occupancy	00	NONE 100
Quality	03	Quality Level 03

DOR CODE	0100	SINGLE FAMILY	
MAP NUM		MKT AREA	01
NEIGHBORHOOD/LOC	1007.00		

AREA TYPE	TOTAL GROSS AREA	PCT OF BASE	TOT ADJ AREA	SUBAREA MARKET VALUE
BAS	2,663	100	2,663	205,423
FOP	18	30	5	385
FOP	24	30	7	540
FOP	110	30	33	2,545
FOP	364	30	109	8,408
STP	35	10	4	309
STP	70	10	7	540
STR	16	10	2	154
STR	16	10	2	154
STR	21	10	2	154
TOTALS	4,033		3,147	242,759

MARKET ADJUSTMENTS

TYPE	MDL	EFF. AREA	TOT ADJ PTS	EFF. BASE RATE	REPL. COST NEW	AYB	EYB	ECON	FNCT		NORM	% COND
0100	01	3,147	104.8800	94.65	297,864	1951	1985	0	0	0	18.50	81.50

1 SINGLE FAM – 0% - 0 Heated Area: 2663 HX Base Yr

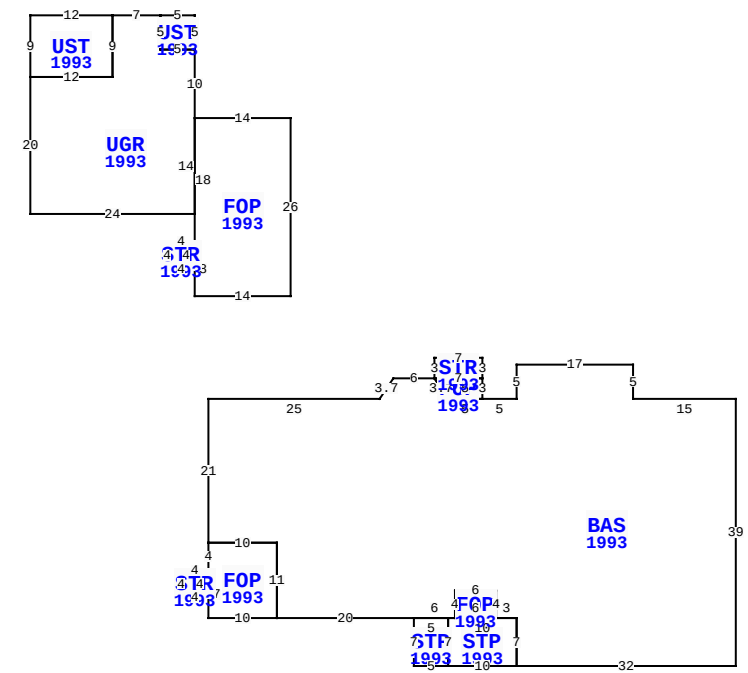

** This building has 13 Sub-Areas

21 N 15TH ST, FERNANDINA BEACH

BLD DATE		LGL DATE	
XF DATE		LAND DATE	
INC DATE		AG DATE	

NASSAU COUNTY PROPERTY

PAGE 1 of 1 2

VALUATION SUMMARY

VALUATION BY	STANDARD
Tax Group: 2	Tax Dist:
BUILDING MARKET VALUE	242,759
TOTAL MARKET OB/XF VALUE	5,384
TOTAL LAND VALUE - MARKET	450,000
TOTAL MARKET VALUE	698,143
SOH/AGL Deduction	280,229
ASSESSED VALUE	417,914
TOTAL EXEMPTION VALUE	0
BASE TAXABLE VALUE	417,914
TOTAL JUST VALUE	698,143
NCON VALUE	0
INCOME VALUE	
PREVIOUS YEAR MKT VALUE	597,162

PERMIT NUM	DESCRIPTION	AMT	ISSUED
20091574	REPAIR/RRF	4,104	11/17/2009

SALES DATA

OFF RECORD Number	DATE	TYPE INST	Q / U	V / I	RSN CD	SALE PRICE
1652/1244	10/28/2009	WD	U	I	11	100
GRANTOR: ARSENAULT KATHLEEN H						
GRANTEE: MUIR CELESTE HARDEE						
1652/1242	10/28/2009	WD	U	I	11	100
GRANTOR: STEGER SUSAN H						
GRANTEE: MUIR CELESTE HARDEE						

BUILDING NOTES

BUILDING DIMENSIONS

BAS=[YR=1993] W15N5W17S5 W5FOP=[YR=1993] N3 STR=[YR=1993] N3W7S3E7$ W7 D3 R2 E5$ W5 L2 U3 W6 L2 D3 W25 S21 FOP=[YR=1993] S4 STR=[YR=1993] W4S4E4N4$ S7E10N11W10$ E10S11 E20 STP=[YR=1993] S7E5 STP=[YR=1993] E10N7W10 S7$ N7W5$ E6 FOP=[YR=1993] E6N4W6S4$ N4E6S4E3S7E32N39$ PTR=W65N15 FOP=[YR=1993] N26W14 UGR=[YR=1993] N10 UST=[YR=1993] N5W5S5E5$ W5N5W7 UST=[YR=1993] W12 S9E12N9$ S9W12S20 E24N14$ S18 STR=[YR=1993] W4S4E4N4$ S8E14$ E65S15$.

EXTRA FEATURES

LN	OB/XF CODE	DESCRIPTION	BLD	CAP	L	W	UNITS	UT	Adj R	ADJ UNIT PRICE	ORIG COND	YEAR ON	YEAR ACTUAL	Q	% COND	OB/XF MKT VALUE	NOTES
1	0500	FP-PRE FAB	0	0	0	0	2.00	UT	3,500.00	3,500.00	100	1951	1951	3	20	1,400	
2	1130	REINFR 6	0	0	150	2	300.00	SF	5.75	5.75	100	1951	1951	3	50	863	
3	0810	CONCRETE A	0	0	52	5	260.00	SF	6.50	6.50	100	1951	1951	3	20	338	
4	0810	CONCRETE A	0	0	27	3	81.00	SF	6.50	6.50	100	1951	1951	3	20	105	
5	0810	CONCRETE A	0	0	0	0	2,060.00	SF	6.50	6.50	100	1951	1951	3	20	2,678	

LAND DESCRIPTION

TOTAL OB/XF 5,384

LN	USE CODE	CLS	LAND USE DESCRIPTION	CAP	RD	LOC ZONE	FRONT	DEPTH	TOT LND UTS	UNIT TYPE	DT	DPTH FACT	% COND	TOT ADJ	UNIT PRICE	ADJ UNIT PRICE	LAND VALUE	OTHER ADJUSTMENTS AND NOTES	YEAR	DENSITY	DECL	FRZ	YR	CONSRV
1	000100	C	SFR	0	0006	R-1	130.00	195.00	1.00	LT		1.00	1.00	2.00	225,000.00	450,000.00	450,000							

REVIEW DATE 05/22/2018 BY DJX Total Acres: 0.00 Total Land Value: 450,000 Market: 0 Agricultural: 0 Common: 450,000 PRINTED 08/02/2023 BY SYS