LOT 31
IN OR 507 PG 1121
SELVA VERDA 2 PB 4/77

RUDGE RICHARD & SUZANNE
2410 LOS ROBLES DRIVE
FERNANDINA BEACH, FL 32034

2023

00-00-31-1686-0031-0000

NASSAU COUNTY PROPERTY

BUILDING CHARACTERISTICS

ELEMENT	CD	CONSTRUCTION
Exterior Wall	16	WD FR STUC 100
Roof Structur	03	GABLE/HIP 100
Roof Cover	03	COMP SHNGL 100
Interior Wall	05	DRYWALL 100
Interior Floo	14	CARPET 60
Interior Floo	12	HARDWOOD 40
Air Condition	03	CENTRAL 100
Heating Type	04	AIR DUCTED 100
Bedrooms		4 100
Bathrooms		3 100
Frame	02	WOOD FRAME 100
Stories	2.	2. 100
Units		0 100
BUD8 Adjustme	02	DIST FB 100
Occupancy	00	NONE 100
Quality	04	Quality Level 04
DOR CODE	0100	SINGLE FAMILY
MAP NUM		MKT AREA 01
NEIGHBORHOOD/LOC	1073.00	

AREA TYPE	TOTAL GROSS AREA	PCT OF BASE	TOT ADJ AREA	SUBAREA MARKET VALUE
BAL	54	15	8	828
BAS	1,615	100	1,615	167,078
FGR	748	55	411	42,520
FOP	50	30	15	1,552
FST	187	55	103	10,656
FUS	1,367	100	1,367	141,421
SFB	432	80	346	35,795
STR	44	10	4	413
UST	378	45	170	17,587
TOTALS	4,875		4,039	417,850

MARKET ADJUSTMENTS

TYPE	MDL	EFF. AREA	TOT ADJ PTS	EFF. BASE RATE	REPL. COST NEW	AYB	EYB	ECON	FNCT		NORM	% COND
0900	01	4,039	100.7160	119.60	483,064	1987	1995	0	0	0	13.50	86.50

1 SNGL FAM – 100% - 0 Heated Area: 3328 HX Base Yr

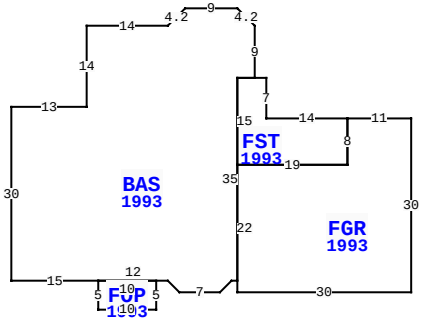

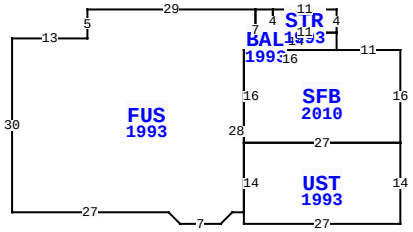

2410 LOS ROBLES, FERNANDINA BEACH

BLD DATE		LGL DATE	
XF DATE		LAND DATE	
INC DATE		AG DATE	

NASSAU COUNTY PROPERTY — VALUATION SUMMARY

VALUATION BY		STANDARD
Tax Group: 2	Tax Dist:	
BUILDING MARKET VALUE		417,850
TOTAL MARKET OB/XF VALUE		53,331
TOTAL LAND VALUE - MARKET		200,000
TOTAL MARKET VALUE		671,181
SOH/AGL Deduction		315,226
ASSESSED VALUE		355,955
TOTAL EXEMPTION VALUE	HX HB	50,000
BASE TAXABLE VALUE		305,955
TOTAL JUST VALUE		671,181
NCON VALUE		0
INCOME VALUE		
PREVIOUS YEAR MKT VALUE		619,545

PERMIT NUM	DESCRIPTION	AMT	ISSUED
20173927	SCRNROOM	20,000	12/13/2017
20122585	WTRHTR	800	12/28/2012
BP4361	N/A	12,000	06/17/1987
BP4250	N/A	165,000	04/06/1987

SALES DATA

OFF RECORD Number	DATE	TYPE INST	Q / U	V / I	RSN CD	SALE PRICE
0507/1121	1/09/1987	WD	Q	V		40,000
GRANTOR: PALMER REED						
GRANTEE: RUDGE RICHARD						
0314/0579	5/01/1980	WD	Q	V		21,000
GRANTOR:						
GRANTEE:						

BUILDING NOTES

BUILDING DIMENSIONS

FGR=[YR=1993] W11 FST=[YR=1993] W14 N7 W2BAS=[YR=1993] N9 U3 L3 W9 D3 L3 W14 S14 W13 S30 E15 FOP=[YR=1993] S5 E10 N5 W10 $ E12 D2 R2 E7 U2 R2 E1 N35 E3 $ W3 S15 E19 N8 $ S8 W19 S22 E30 N30 $ PTR= E20FUS=[YR=1993] E13 N5 E29 BAL=[YR=1993] E3 STR=[YR=1993] E11 S4 W11 N4 $ S4 E11S3 SFB=[YR=2010] E11 S16UST=[YR=1993] S14 W27 N14 E27 $ W27 N16 E16 $ W14 N7 $ S7 W2 S28 W2 D2 L2 W7 U2 L2 W27 N30 $ W20 $.

EXTRA FEATURES

LN	OB/XF CODE	DESCRIPTION	BLD	CAP	L	W	UNITS	UT	Adj R	ADJ UNIT PRICE	ORIG COND	YEAR ON	YEAR ACTUAL	Q	% COND	OB/XF MKT VALUE	NOTES
1	0812	CONCRETE C	0	100	0	0	3,073.00	SF	4.00	4.00	100	1987	1987	3	54.5	6,699	
2	0810	CONCRETE A	0	100	42	3	126.00	SF	6.50	6.50	100	1987	1987	3	54.5	446	
3	0820	WOOD WALK	0	100	41	3	123.00	SF	11.75	11.75	100	1987	1987	3	40	578	
4	1242	WD DECK A	0	100	25	19	475.00	SF	10.00	10.00	100	1987	1987	3	20	950	
5	0811	CONCRETE B	0	100	0	0	259.00	SF	5.20	5.20	100	1987	1987	3	54.5	734	
6	0861	POOL GUNIT	0	100	37	14	518.00	SF	85.00	85.00	100	1987	1987	3	20	8,806	
7	0855	CONC PAVER	0	100	0	0	1,048.00	SF	10.00	10.00	100	2018	2018	3	98	10,270	
8	0911	SCRN RM A	0	100	0	0	1,566.00	SF	17.50	17.50	100	2018	2018	3	86	23,568	
9	0504	FP-ELECTRI	0	100	0	0	1.00	UT	2,000.00	2,000.00	100	1987	1987	3	64	1,280	

LAND DESCRIPTION

TOTAL OB/XF 53,331

LN	USE CODE	CLS	LAND USE DESCRIPTION	CAP	RD	LOC ZONE	FRONT	DEPTH	TOT LND UTS	UNIT TYPE	DT	DPTH FACT	% COND	TOT ADJ	UNIT PRICE	ADJ UNIT PRICE	LAND VALUE	OTHER ADJUSTMENTS AND NOTES	YEAR	DENSITY	DECL	FRZ	YR	CONSRV
1	000140	C	SFR GOLF A	100			0.00	0.00	1.00	LT		1.00	1.00	0.80	250,000.00	200,000.00	200,000							

REVIEW DATE 04/30/2018 BY DJ Total Acres: 0.00 Total Land Value: 200,000 Market: 0 Agricultural: 0 Common: 200,000 PRINTED 08/02/2023 BY SYS