LOT 27
IN OR 534 PG 167
SELVA VERDA 2 PB 4/77

DRAWDY MICHAEL L & DEBRA JAN
2402 LOS ROBLES DR
FERNANDINA BEACH, FL 32034

2023

00-00-31-1686-0027-0000

NASSAU COUNTY PROPERTY

BUILDING CHARACTERISTICS

ELEMENT	CD	CONSTRUCTION
Exterior Wall	10	ABOVE AVG 100
Roof Structur	03	GABLE/HIP 100
Roof Cover	03	COMP SHNGL 100
Interior Wall	05	DRYWALL 100
Interior Floo	14	CARPET 100
Air Condition	03	CENTRAL 100
Heating Type	04	AIR DUCTED 100
Bedrooms		3 100
Bathrooms		2.5 100
Frame	02	WOOD FRAME 100
Stories	1.	1. 100
Units		0 100
BUD8 Adjustme	02	DIST FB 100
Occupancy	00	NONE 100
Quality	03	Quality Level 03

DOR CODE 0100 SINGLE FAMILY
MAP NUM | MKT AREA 01
NEIGHBORHOOD/LOC 1073.00

AREA TYPE	TOTAL GROSS AREA	PCT OF BASE	TOT ADJ AREA	SUBAREA MARKET VALUE
BAS	1,871	100	1,871	193,501
BAS	480	100	480	49,642
DCK	56	10	6	621
FGR	552	55	304	31,440
FOP	8	30	2	207
PTO	480	5	24	2,482
UOP	84	20	17	1,758
TOTALS	3,531		2,704	279,649

MARKET ADJUSTMENTS

TYPE	MDL	EFF. AREA	TOT ADJ PTS	EFF. BASE RATE	REPL. COST NEW	AYB	EYB	ECON	FNCT		NORM	% COND
0900	01	2,704	103.6800	123.12	332,916	1981	1986	0	0	0	16.00	84.00

1 SNGL FAM – 100% - 0 Heated Area: 2351 HX Base Yr

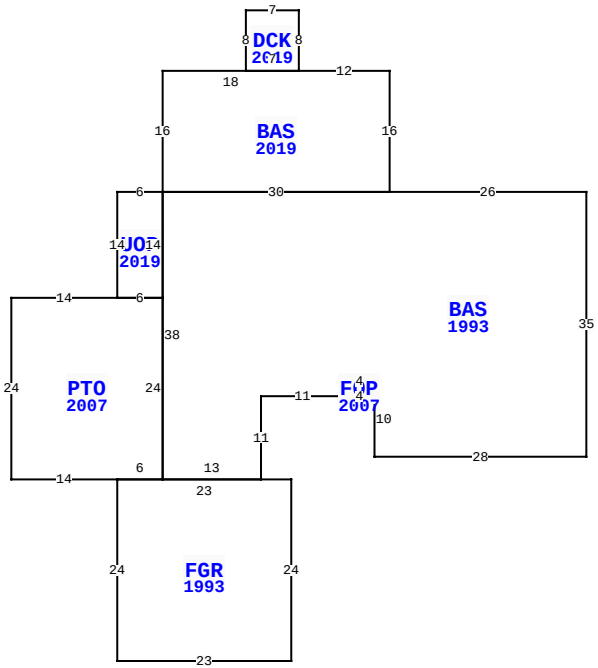

2402 LOS ROBLES, FERNANDINA BEACH

BLD DATE		LGL DATE	
XF DATE		LAND DATE	
INC DATE		AG DATE	

VALUATION SUMMARY

VALUATION BY		STANDARD
Tax Group: 2	Tax Dist:	
BUILDING MARKET VALUE		279,649
TOTAL MARKET OB/XF VALUE		12,471
TOTAL LAND VALUE - MARKET		175,000
TOTAL MARKET VALUE		467,120
SOH/AGL Deduction		259,501
ASSESSED VALUE		207,619
TOTAL EXEMPTION VALUE	HX HB	50,000
BASE TAXABLE VALUE		157,619
TOTAL JUST VALUE		467,120
NCON VALUE		0
INCOME VALUE		
PREVIOUS YEAR MKT VALUE		438,065

PERMIT NUM	DESCRIPTION	AMT	ISSUED
20183897	ADDITION	58,443	11/15/2018
20061399	REPAIR/RRF	8,500	06/20/2006

SALES DATA

OFF RECORD Number	DATE	TYPE INST	Q U	V I	RSN CD	SALE PRICE
0534/0167	12/30/1987	WD	Q	I		114,500
GRANTOR: FLAMM RICHARD & S E						
GRANTEE: DRAWDY MICHAEL & D						
0343/0305	8/01/1981	WD	Q	V		102,500
GRANTOR:						
GRANTEE:						

BUILDING NOTES

BUILDING DIMENSIONS

BAS=[YR=1993] W26 BAS=[YR=2019] N16 W12 DCK=[YR=2019] N8 W7 S8 E7$ W18 S16 E30$ W30 UOP=[YR=2019] W6 S14 PTO=[YR=2007] W14 S24 E14 FGR=[YR=1993] S24 E23 N24 W23$ E6 N24 W6$ E6 N14$ S38 E13 N11 E11 FOP=[YR=2007] E4 N2 W4 S2$ N2 E4 S10 E28 N35 $.

EXTRA FEATURES

LN	OB/XF CODE	DESCRIPTION	BLD	CAP	L	W	UNITS	UT	Adj R	ADJ UNIT PRICE	ORIG COND	YEAR ON	YEAR ACTUAL	Q	% COND	OB/XF MKT VALUE	NOTES
1	0810	CONCRETE A	0	100	0	0	400.00	SF	6.50	6.50	100	1981	1981	3	38	988	
2	0500	FP-PRE FAB	0	100	0	0	1.00	UT	3,500.00	3,500.00	100	1981	1981	3	51.5	1,803	
3	0810	CONCRETE A	0	100	0	0	64.00	SF	6.50	6.50	100	1981	1981	3	38	158	
4	0812	CONCRETE C	0	100	0	0	2,700.00	SF	4.00	4.00	100	1995	1995	3	72	7,776	
5	0462	ST/AL FNC	0	100	24	5	120.00	SF	10.00	10.00	100	2007	2007	3	52	624	
6	0463	FENCE GATE	0	100	0	0	1.00	UT	300.00	300.00	100	2007	2007	3	74	222	
7	0940	SHEDS/PORT	0	100	16	12	192.00	SF	21.30	21.30	100	2003	2003	3	22	900	

LAND DESCRIPTION

TOTAL OB/XF 12,471

LN	USE CODE	CLS	LAND USE DESCRIPTION	CAP	RD	LOC ZONE	FRONT	DEPTH	TOT LND UTS	UNIT TYPE	DT	DPTH FACT	% COND	TOT ADJ	UNIT PRICE	ADJ UNIT PRICE	LAND VALUE	OTHER ADJUSTMENTS AND NOTES	YEAR	DENSITY	DECL	FRZ	YR	CONSRV
1	000100	C	SFR	100			0.00	0.00	1.00	LT		1.00	1.00	1.00	175,000.00	175,000.00	175,000							

REVIEW DATE 08/20/2019 BY DJA Total Acres: 0.00 Total Land Value: 175,000 Market: 0 Agricultural: 0 Common: 175,000 PRINTED 08/02/2023 BY SYS