BLOCK 15 LOTS 5 6 7 &
PT OF WITHLOCOOCHEE AVE
IN OR 2087/166

KING THOMAS E & ELLEN E
3769 S FLETCHER AVE
FERNANDINA BEACH, FL 32034

2023

00-00-31-1680-0015-0050

BUILDING CHARACTERISTICS

ELEMENT	CD	CONSTRUCTION
Exterior Wall	10	ABOVE AVG 60
Exterior Wall	17	CB STUCCO 40
Roof Structur	03	GABLE/HIP 100
Roof Cover	12	MODULAR MT 100
Interior Wall	05	DRYWALL 100
Interior Floo	12	HARDWOOD 70
Interior Floo	11	CLAY TILE 30
Air Condition	03	CENTRAL 100
Heating Type	04	AIR DUCTED 100
Bedrooms		3 100
Bathrooms		2 100
Frame	02	WOOD FRAME 100
Stories	3.	3. 100
Units		0 100
BUD8 Adjustme	02	DIST FB 100
Quality	03	Quality Level 03
DOR CODE	0100	SINGLE FAMILY
MAP NUM		MKT AREA 01
NEIGHBORHOOD/LOC	1059.00	

AREA TYPE	TOTAL GROSS AREA	PCT OF BASE	TOT ADJ AREA	SUBAREA MARKET VALUE
BAL	407	15	61	11,253
BAL	1,193	15	179	33,022
BAS	1,064	100	1,064	196,285
BAS	36	100	36	6,642
BAS	112	100	112	20,662
BAS	280	100	280	51,654
FST	28	55	15	2,767
FST	32	55	18	3,320
FST	552	55	304	56,082
FUS	624	100	624	115,115
TOTALS	5,015		2,967	547,349

MARKET ADJUSTMENTS

TYPE	MDL	EFF. AREA	TOT ADJ PTS	EFF. BASE RATE	REPL. COST NEW	AYB	EYB	ECON	FNCT		NORM	% COND
0500	11	2,967	137.2870	195.63	580,434	1982	2010	0	0	0	5.70	94.30

1 SFR CUST – 100% - 2019 Heated Area: 2116 HX Base Yr 2019

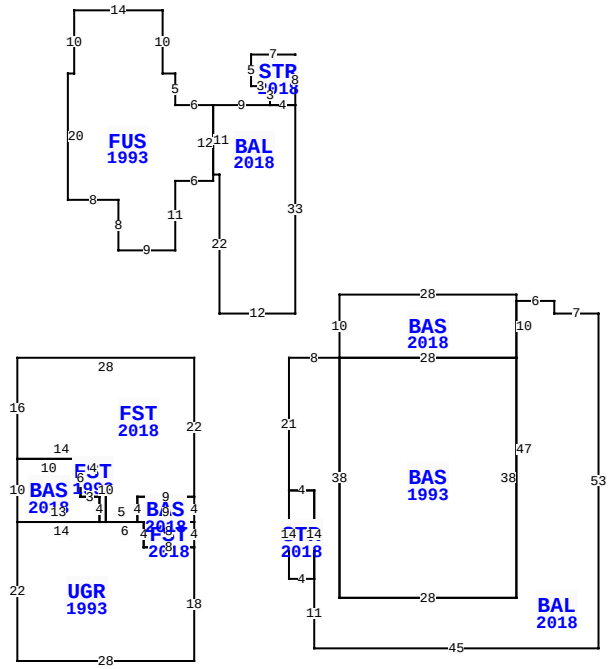

** This building has 13 Sub-Areas

BLD DATE	03/13/2008 DJ	LGL DATE
XF DATE		LAND DATE
INC DATE		AG DATE

3769 S FLETCHER AVE, FERNANDINA BEACH

NASSAU COUNTY PROPERTY

PAGE 1 of 1 2

VALUATION SUMMARY

VALUATION BY		STANDARD
Tax Group: 2	Tax Dist:	
BUILDING MARKET VALUE		547,349
TOTAL MARKET OB/XF VALUE		81,980
TOTAL LAND VALUE - MARKET		439,306
TOTAL MARKET VALUE		1,068,635
SOH/AGL Deduction		344,460
ASSESSED VALUE		724,175
TOTAL EXEMPTION VALUE	HX HB	50,000
BASE TAXABLE VALUE		674,175
TOTAL JUST VALUE		1,068,635
NCON VALUE		0
INCOME VALUE		
PREVIOUS YEAR MKT VALUE		983,018

PERMIT NUM	DESCRIPTION	AMT	ISSUED
20190155	REMODEL	0	02/18/2019
20172946	SWIM POOL	91,786	09/26/2017
20171431	ADDITION	195,000	05/11/2017
B032747	ADDITION	3,000	03/24/2003
B032737	REMODEL	10,000	03/21/2003
B959232	REPAIR/RRF	3,500	08/08/1995

SALES DATA

OFF RECORD Number	DATE	TYPE INST	Q / U	V / I	RSN CD	SALE PRICE
2087/0166	12/02/2016	WD	Q	I	01	450,000
GRANTOR: FASHINGBAUER DAVID J						
GRANTEE: KING THOMAS E & ELL						
1295/1267	2/16/2005	WD	Q	I		515,000
GRANTOR: RAWLS ROBIN						
GRANTEE: FASHINGBAUER DAVID						

BUILDING NOTES

BUILDING DIMENSIONS

FST=[YR=2018] W28 S16 BAS=[YR=2018] S10 UGR=[YR=1993] S22 E28 N18 FST=[YR=2018] N4 BAS=[YR=2018] N4 W9 S4 E9$ W8 S4 E8$ W8 N4 W6 FST=[YR=1993] N10 W4 S6 E3 S4 E1$ W14$ E13 N4 W3 N6 W10$ E14 S10 E5 N4 E9 N22$ PTR=E15 BAL=[YR=2018] E8 BAS=[YR=2018] N10 E28 S10 BAS=[YR=1993] S38 W28 N38 E28$ W28$ S38 E28 N47 E6 S2 E7 S53 W45 N11 STR=[YR=2018] W4 N14 E4 S14$ N14 W4 N21$ W15$ PTR=N45 W20 FUS=[YR=1993] E1 N10 E14 S10 E2 S5 E6 BAL=[YR=2018] E9 STR=[YR=2018] N3 W3 N5 E7S8 W4$ E4 S33 W12 N22 W1 N11 $ S12 W6 S11 W9 N8 W8 N20$ S45 E20$.

EXTRA FEATURES

LN	OB/XF CODE	DESCRIPTION	BLD	CAP	L	W	UNITS	UT	Adj R	ADJ UNIT PRICE	ORIG COND	YEAR ON	YEAR ACTUAL	Q	% COND	OB/XF MKT VALUE	NOTES
1	0858	SCULP CONC	0	100	0	0	2,277.00	SF	13.00	13.00	100	2018	2018	3	99	29,305	
2	0504	FP-ELECTRI	0	100	0	0	1.00	UT	2,000.00	2,000.00	100	2018	2018	3	99	1,980	
3	0861	POOL GUNIT	0	100	0	0	392.00	SF	85.00	85.00	100	2018	2018	3	90	29,988	
4	0855	CONC PAVER	0	100	0	0	1,144.00	SF	10.00	10.00	100	2018	2018	3	98	11,211	
5	0871	POOL HTR R	0	100	0	0	1.00	UT	2,000.00	2,000.00	100	2018	2018	3	86	1,720	
6	0462	ST/AL FNC	0	100	0	0	864.00	SF	10.00	10.00	100	2018	2018	3	90	7,776	

LAND DESCRIPTION

TOTAL OB/XF 81,980

LN	USE CODE	CLS	LAND USE DESCRIPTION	CAP	RD	LOC ZONE	FRONT	DEPTH	TOT LND UTS	UNIT TYPE	DT	DPTH FACT	% COND	TOT ADJ	UNIT PRICE	ADJ UNIT PRICE	LAND VALUE	OTHER ADJUSTMENTS AND NOTES	YEAR	DENSITY	DECL	FRZ	YR	CONSRV
1	000100	C	SFR	100			75.00	125.00	75.00	FF	1	1.09	1.00	1.01	5,800.00	5,857.42	439,306							

REVIEW DATE 06/28/2018 BY DJ Total Acres: 0.00 Total Land Value: 439,306 Market: 0 Agricultural: 0 Common: 439,306 PRINTED 08/02/2023 BY SYS