BLOCK 6 LOTS 11 12 13 &
E 35 FT OF LOTS 20 21 & 22
IN OR 630 PG 109

HARRISON JACK E
P O BOX 16161
FERNANDINA BEACH, FL 32035-3120

2023

00-00-31-1680-0006-0110

NASSAU COUNTY PROPERTY

BUILDING CHARACTERISTICS

ELEMENT	CD	CONSTRUCTION
Exterior Wall	16	WD FR STUC 50
Exterior Wall	17	CB STUCCO 50
Roof Structur	03	GABLE/HIP 100
Roof Cover	03	COMP SHNGL 100
Interior Wall	03	PLASTER 100
Interior Floo	14	CARPET 90
Interior Floo	08	SHT VINYL 10
Air Condition	03	CENTRAL 100
Heating Type	04	AIR DUCTED 100
Bedrooms		3 100
Bathrooms		2 100
Frame	02	WOOD FRAME 100
Stories	2.	2. 100
Units		0 100
BUD8 Adjustme	02	DIST FB 100
Occupancy	00	NONE 100
Quality	04	Quality Level 04
DOR CODE	0100	SINGLE FAMILY
MAP NUM		MKT AREA 01
NEIGHBORHOOD/LOC	1053.00	

AREA TYPE	TOTAL GROSS AREA	PCT OF BASE	TOT ADJ AREA	SUBAREA MARKET VALUE
BAS	104	100	104	12,923
BAS	132	100	132	16,402
BAS	147	100	147	18,266
FOP	52	30	16	1,988
FOP	56	30	17	2,112
FOP	72	30	22	2,733
FST	45	55	25	3,106
FUS	1,647	100	1,647	204,655
FUS	30	100	30	3,728
UGR	1,116	45	502	62,378
TOTALS	3,988		2,781	345,564

MARKET ADJUSTMENTS

TYPE	MDL	EFF. AREA	TOT ADJ PTS	EFF. BASE RATE	REPL. COST NEW	AYB	EYB	ECON	FNCT		NORM	% COND
0500	01	2,781	110.3760	157.29	437,423	1975	1980	0	0	0	21.00	79.00

1 SFR CUST – 100% - 0 Heated Area: 2060 HX Base Yr

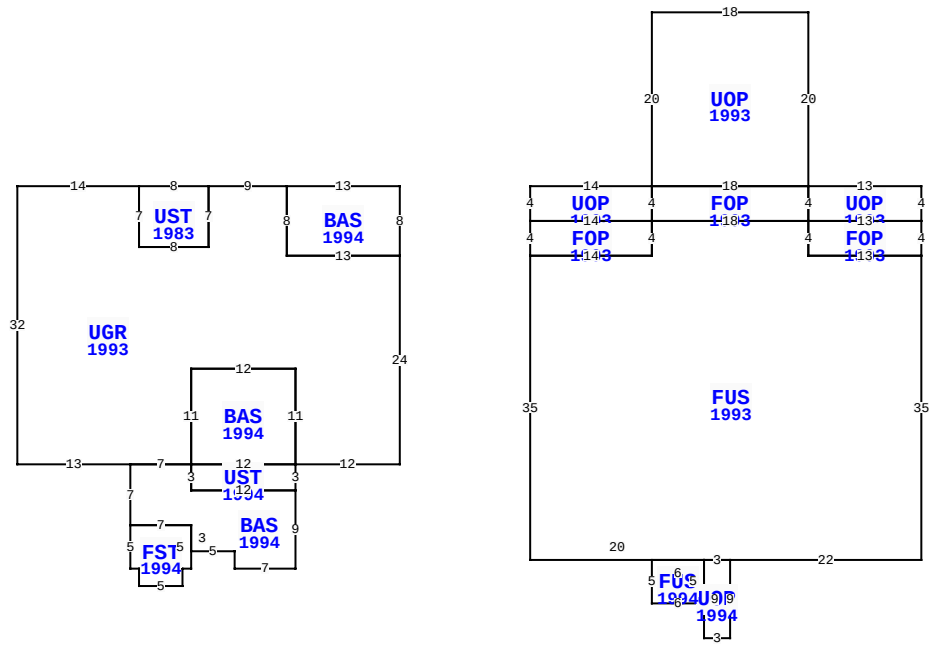

** This building has 16 Sub-Areas

3800 S FLETCHER AVE, FERNANDINA BEACH

BLD DATE		LGL DATE	
XF DATE		LAND DATE	
INC DATE		AG DATE	

VALUATION SUMMARY

VALUATION BY		STANDARD
Tax Group: 2	Tax Dist:	
BUILDING MARKET VALUE		345,564
TOTAL MARKET OB/XF VALUE		20,881
TOTAL LAND VALUE - MARKET		1,239,000
TOTAL MARKET VALUE		1,605,445
SOH/AGL Deduction		1,214,759
ASSESSED VALUE		390,686
TOTAL EXEMPTION VALUE	HX HB	50,000
BASE TAXABLE VALUE		340,686
TOTAL JUST VALUE		1,605,445
NCON VALUE		0
INCOME VALUE		
PREVIOUS YEAR MKT VALUE		1,595,287

PERMIT NUM	DESCRIPTION	AMT	ISSUED
20121550	NEW CONSTR	850	07/31/2012
20121353	ENC FRT ENT	35,000	07/10/2012
20121354	ROOF	1,500	07/10/2012
20080844	H/AC	4,500	05/19/2008
B020664	REPAIR/RRF	3,000	04/18/2002
B020664	REPAIR/RRF	3,000	04/18/2002

SALES DATA

OFF RECORD Number	DATE	TYPE INST	Q / U	V / I	RSN CD	SALE PRICE
0630/0109	6/28/1991	WD	Q	I		285,000
GRANTOR: MORRIS REAL EST CONS						
GRANTEE: HARRISON JACK & V H						
0488/0001	4/01/1986	WD	U	I		252,000
GRANTOR:						
GRANTEE:						

BUILDING NOTES

BUILDING DIMENSIONS

BAS=[YR=1994] W13 UGR=[YR=1993] W9 UST=[YR=1983] W8 S7 E8 N7 $ S7 W8 N7 W14 S32 E13 BAS=[YR=1994] S7 FST=[YR=1994] S5 E1 S2 E5 N2 E1 N5 W7$ E7 S3 E5 S2 E7 N9 UST=[YR=1994] N3 BAS=[YR=1994] N11 W12 S11 E12 $ W12 S3 E12$ W12 N3 W7$E7 N11 E12 S11 E12 N24 W13 N8 $ S8 E13 N8 $ PTR= E15 UOP=[YR=1993] E14 UOP=[YR=1993] N20 E18 S20 UOP=[YR=1993] E13 S4 FOP=[YR=1993] S4 W13 N4 E13 $ W13 N4 $ FOP=[YR=1993] S4 W18 N4 E18 $ W18 $ S4 FUS=[YR=1993] E18 S4 E13 S35 W22 UOP=[YR=1994] S9 W3 N9 E3 $ W3 FUS=[YR=1994] W6 S5 E6 N5 $ W20 N35 FOP=[YR=1993] N4 E14 S4 W14 $ E14 N4$ W14 N4 $ W15 $.

EXTRA FEATURES

LN	OB/XF CODE	DESCRIPTION	BLD	CAP	L	W	UNITS	UT	Adj R	ADJ UNIT PRICE	ORIG COND	YEAR ON	YEAR ACTUAL	Q	% COND	OB/XF MKT VALUE	NOTES
1	0500	FP-PRE FAB	0	100	0	0	1.00	UT	3,500.00	3,500.00	100	1975	1975	3	38	1,330	
2	0850	PEBBLE WLK	0	100	0	0	2,193.00	SF	3.50	3.50	100	1994	1994	3	70	5,373	
3	0850	PEBBLE WLK	0	100	0	0	52.00	SF	3.50	3.50	100	1994	1994	3	70	127	
4	0820	WOOD WALK	0	100	193	4	772.00	SF	11.75	11.75	100	1987	1987	3	40	3,628	
5	0810	CONCRETE A	0	100	0	0	207.00	SF	6.50	6.50	100	1975	1975	3	27	363	
6	1242	WD DECK A	0	100	0	0	30.00	SF	10.00	10.00	100	1987	1987	3	20	60	
7	0410	ELEVATOR	0	100	0	0	1.00	UT	10,000.00	10,000.00	100	1994	1994	3	100	10,000	

LAND DESCRIPTION

TOTAL OB/XF 20,881

LN	USE CODE	CLS	LAND USE DESCRIPTION	CAP	RD	LOC ZONE	FRONT	DEPTH	TOT LND UTS	UNIT TYPE	DT	DPTH FACT	% COND	TOT ADJ	UNIT PRICE	ADJ UNIT PRICE	LAND VALUE	OTHER ADJUSTMENTS AND NOTES	YEAR	DENSITY	DECL	FRZ	YR	CONSRV
1	000120	C	SFR OCN FT	100			75.00	400.00	75.00	FF	3	1.18	1.00	1.18	14,000.00	16,520.00	1,239,000							

REVIEW DATE 10/18/2017 BY DJ Total Acres: 0.00 Total Land Value: 1,239,000 Market: 0 Agricultural: 0 Common: 1,239,000 PRINTED 08/02/2023 BY SYS