LOT 28
IN OR 2127/969
CONSERVATION ESMT PT 1012/320

ZELKO WARREN A & BELINDA C
506 CROSSWIND DRIVE
FERNANDINA BEACH, FL 32034

2023

00-00-31-1679-0028-0000

NASSAU COUNTY PROPERTY

BUILDING CHARACTERISTICS

ELEMENT	CD	CONSTRUCTION
Exterior Wall	16	WD FR STUC 80
Exterior Wall	23	REINF CONC 20
Roof Structur	08	IRREGULAR 100
Roof Cover	03	COMP SHNGL 100
Interior Wall	05	DRYWALL 100
Interior Floo	12	HARDWOOD 90
Interior Floo	11	CLAY TILE 10
Air Condition	03	CENTRAL 100
Heating Type	04	AIR DUCTED 100
Bedrooms		5 100
Bathrooms		3.5 100
Frame	02	WOOD FRAME 100
Stories	1.5	1.5 100
Units		0 100
Occupancy	00	NONE 100
Quality	05	Quality Level 05
DOR CODE	0100	SINGLE FAMILY
MAP NUM		MKT AREA 01
NEIGHBORHOOD/LOC	1080.00	

AREA TYPE	TOTAL GROSS AREA	PCT OF BASE	TOT ADJ AREA	SUBAREA MARKET VALUE
BAS	2,386	100	2,386	358,079
DCK	410	10	41	6,153
FEP	276	80	221	33,167
FGR	714	55	393	58,980
FOP	96	30	29	4,352
FST	56	55	31	4,652
FUS	440	100	440	66,033
TOTALS	4,378		3,541	531,416

MARKET ADJUSTMENTS

TYPE	MDL	EFF. AREA	TOT ADJ PTS	EFF. BASE RATE	REPL. COST NEW	AYB	EYB	ECON	FNCT		NORM	% COND
0500	01	3,541	117.0180	166.75	590,462	2000	2002	0	0	0	10.00	90.00

1 SFR CUST – 100% - 2018 Heated Area: 2826 HX Base Yr 2018

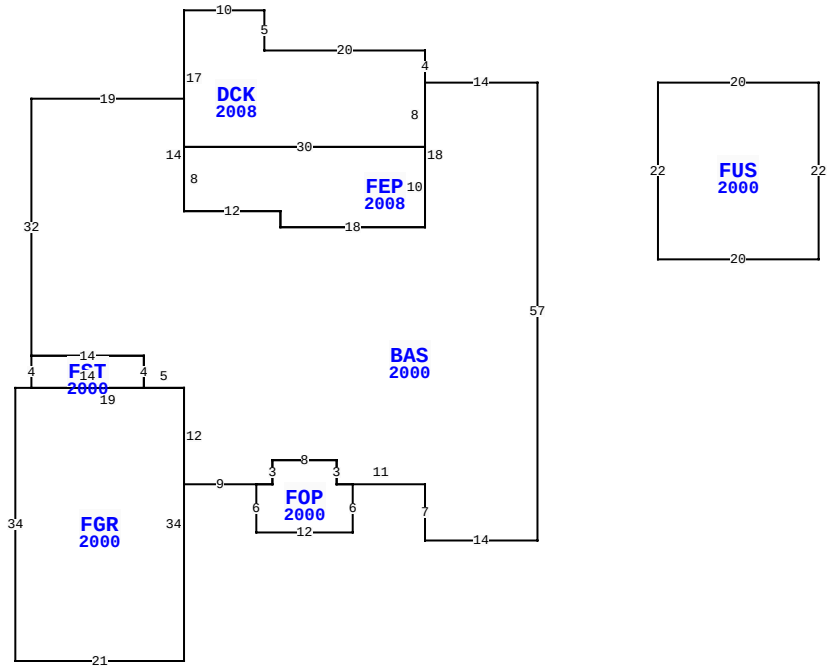

506 CROSSWIND DR, FERNANDINA BEACH

BLD DATE		LGL DATE	
XF DATE		LAND DATE	08/01/2023 MLU
INC DATE		AG DATE	

VALUATION SUMMARY

VALUATION BY		STANDARD
Tax Group: 2	Tax Dist:	
BUILDING MARKET VALUE		531,416
TOTAL MARKET OB/XF VALUE		19,381
TOTAL LAND VALUE - MARKET		225,000
TOTAL MARKET VALUE		775,797
SOH/AGL Deduction		243,982
ASSESSED VALUE		531,815
TOTAL EXEMPTION VALUE	HX HB	50,000
BASE TAXABLE VALUE		481,815
TOTAL JUST VALUE		775,797
NCON VALUE		0
INCOME VALUE		
PREVIOUS YEAR MKT VALUE		634,754

PERMIT NUM	DESCRIPTION	AMT	ISSUED
20131538	REPAIR/RRF	19,792	07/02/2013
B1313537	REPAIR/RRF	16,200	06/01/2013
20121527	H/AC	3,000	07/27/2012
20120554	H/AC	3,000	04/03/2012
20060822	XFOB	2,600	04/20/2006
2002703	NEW CONSTR	280,000	04/11/2000

SALES DATA

OFF RECORD Number	DATE	TYPE INST	Q / U	V / I	RSN CD	SALE PRICE
2127/0969	6/19/2017	WD	Q	I	01	550,000
GRANTOR: MANN ELMER HEATH & JA						
GRANTEE: ZELKO WARREN A & BE						
0964/1603	1/04/2001	WD	U	I	21	299,500
GRANTOR: PANITZ HOMES						
GRANTEE: MANN ELMER HEATH &						

BUILDING NOTES

BUILDING DIMENSIONS

BAS=[YR=2000] W14 DCK=[YR=2008] N4 W20 N5 W10 S17
FEP=[YR=2008] S8 E12 S2 E18 N10 W30$ E30 N8$ S18 W18 N2 W12
N14 W19 S32 FST=[YR=2000] S4 FGR=[YR=2000] W2 S34 E21 N34
W19$ E14 N4 W14$ E14 S4 E5 S12 E9 FOP=[YR=2000] S6 E12 N6 W2
N3 W8 S3 W2$ E2 N3 E8 S3 E11 S7 E14 N57 $ PTR=E15
FUS=[YR=2000] E20 S22 W20 N22 $ W15 $.

EXTRA FEATURES

LN	OB/XF CODE	DESCRIPTION	BLD	CAP	L	W	UNITS	UT	Adj R	ADJ UNIT PRICE	ORIG COND	YEAR ON	YEAR ACTUAL	Q	% COND	OB/XF MKT VALUE	NOTES
1	0500	FP-PRE FAB	0	100	0	0	1.00	UT	3,500.00	3,500.00	100	2000	2000	3	85	2,975	
2	0835	QUARY TILE	0	100	3	9	27.00	SF	20.00	20.00	100	2001	2001	3	82	443	
3	1242	WD DECK A	0	100	8	4	32.00	SF	15.00	15.00	100	2000	2000	3	20	96	
4	1242	WD DECK A	0	100	5	4	20.00	SF	10.00	10.00	100	2000	2000	3	20	40	
5	0855	CONC PAVER	0	100	0	0	248.00	SF	7.00	7.00	100	2014	2014	3	95	1,649	
6	0855	CONC PAVER	0	100	0	0	1,648.00	SF	7.00	7.00	100	2014	2014	3	95	10,959	
7	0810	CONCRETE A	0	100	0	0	316.00	SF	6.50	6.50	100	2001	2001	3	82	1,684	
8	0810	CONCRETE A	0	100	72	4	288.00	SF	6.50	6.50	100	2001	2001	3	82	1,535	

LAND DESCRIPTION

TOTAL OB/XF 19,381

LN	USE CODE	CLS	LAND USE DESCRIPTION	CAP	RD	LOC ZONE	FRONT	DEPTH	TOT LND UTS	UNIT TYPE	DT	DPTH FACT	% COND	TOT ADJ	UNIT PRICE	ADJ UNIT PRICE	LAND VALUE	OTHER ADJUSTMENTS AND NOTES	YEAR	DENSITY	DECL	FRZ	YR	CONSRV
1	000100	C	SFR	100		R-1A	0.00	0.00	1.00	LT		1.00	1.00	1.00	225,000.00	225,000.00	225,000							

REVIEW DATE 07/02/2018 BY DJX Total Acres: 0.00 Total Land Value: 225,000 Market: 0 Agricultural: 0 Common: 225,000 PRINTED 08/02/2023 BY SYS