LOT 25
IN OR 962/192
CONSERVATION ESMT PT 1012/320

WILLIAMS GREGG A & BETTY K
514 STARBOARD LANDING
FERNANDINA BEACH, FL 32034

2023

00-00-31-1679-0025-0000

BUILDING CHARACTERISTICS

ELEMENT	CD	CONSTRUCTION
Exterior Wall	16	WD FR STUC 70
Exterior Wall	23	REINF CONC 30
Roof Structur	08	IRREGULAR 100
Roof Cover	03	COMP SHNGL 100
Interior Wall	05	DRYWALL 100
Interior Floo	14	CARPET 70
Interior Floo	15	HARDTILE 30
Air Condition	03	CENTRAL 100
Heating Type	04	AIR DUCTED 100
Bedrooms		4 100
Bathrooms		3 100
Frame	02	WOOD FRAME 100
Stories	1.	1. 100
Units		0 100
Occupancy	00	NONE 100
Quality	05	Quality Level 05
DOR CODE	0100	SINGLE FAMILY
MAP NUM		MKT AREA 01
NEIGHBORHOOD/LOC	1080.00	

AREA TYPE	TOTAL GROSS AREA	PCT OF BASE	TOT ADJ AREA	SUBAREA MARKET VALUE
BAS	2,423	100	2,423	379,668
FGR	580	55	319	49,985
FOP	38	30	11	1,724
FOP	235	30	70	10,968
TOTALS	3,276		2,823	442,345

MARKET ADJUSTMENTS

TYPE	MDL	EFF. AREA	TOT ADJ PTS	EFF. BASE RATE	REPL. COST NEW	AYB	EYB	ECON	FNCT		NORM	% COND
0500	01	2,823	123.5520	176.06	497,017	2000	2000	0	0	0	11.00	89.00

1 SFR CUST - 100% - 2001 Heated Area: 2423 HX Base Yr 2001

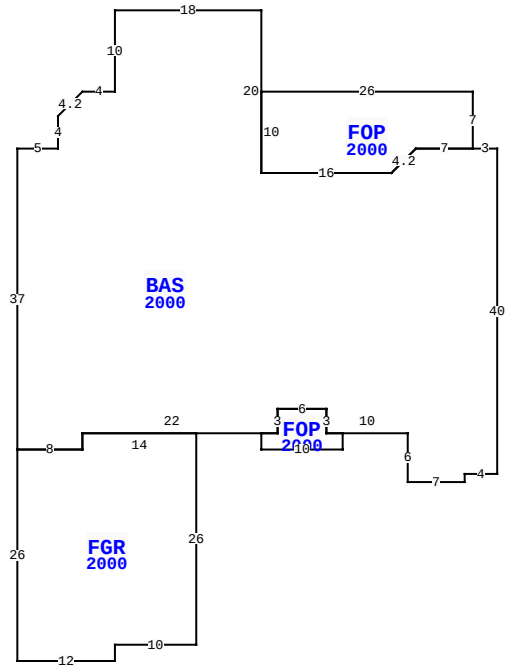

514 STARBOARD LDG, FERNANDINA BEACH

BLD DATE	06/24/2009 RK	LGL DATE	08/01/2023 MLU
XF DATE		LAND DATE	
INC DATE		AG DATE	

NASSAU COUNTY PROPERTY

PAGE 1 of 2 2

VALUATION SUMMARY

VALUATION BY		STANDARD
Tax Group: 2	Tax Dist:	
BUILDING MARKET VALUE		442,345
TOTAL MARKET OB/XF VALUE		34,668
TOTAL LAND VALUE - MARKET		225,000
TOTAL MARKET VALUE		702,013
SOH/AGL Deduction		335,798
ASSESSED VALUE		366,215
TOTAL EXEMPTION VALUE	HX HB	50,000
BASE TAXABLE VALUE		316,215
TOTAL JUST VALUE		702,013
NCON VALUE		0
INCOME VALUE		
PREVIOUS YEAR MKT VALUE		575,485

PERMIT NUM	DESCRIPTION	AMT	ISSUED
20091632	H/AC	3,000	12/01/2009
20071714	XFOB	1,100	09/10/2007
2004392	SWIM POOL	24,000	11/23/2000

SALES DATA

OFF RECORD Number	DATE	TYPE INST	Q U	V I	RSN CD	SALE PRICE
0962/0192	12/14/2000	WD	Q	I		261,300
GRANTOR: PANITZ HOMES						
GRANTEE: WILLIAMS GREGG A &						
0928/1195	4/14/2000	WD	U	V	09	320,600
GRANTOR: SEASIDE JOINT VENTURE						
GRANTEE: PANITZ HOMES						

BUILDING NOTES

BUILDING DIMENSIONS

BAS=[YR=2000] W3 FOP=[YR=2000] N7 W26 S10 E16 U3 R3 E7$W7 D3 L3 W16 N20 W18 S10 W4 D3 L3 S4 W5 S37 FGR=[YR=2000] S26 E12 N2 E10 N26 W14 S2 W8 $ E8 N2 E22 FOP=[YR=2000] S2 E10 N2 W2 N3 W6 S3 W2 $ E2 N3 E6 S3 E10 S6 E7 N1 E4 N40 $.

EXTRA FEATURES

LN	OB/XF CODE	DESCRIPTION	BLD	CAP	L	W	UNITS	UT	Adj R	ADJ UNIT PRICE	ORIG COND	YEAR ON	YEAR ACTUAL	Q	% COND	OB/XF MKT VALUE	NOTES
1	0500	FP-PRE FAB	0	100	0	0	1.00	UT	3,500.00	3,500.00	100	2000	2000	3	85	2,975	
2	0877	JACUZZI	0	100	0	0	1.00	UT	1,000.00	1,000.00	100	2000	2000	3	20	200	
3	0835	QUARY TILE	0	100	6	6	36.00	SF	20.00	20.00	100	2003	2003	3	84	605	
4	1242	WD DECK A	0	100	4	4	16.00	SF	15.00	15.00	100	2000	2000	3	20	48	
5	0810	CONCRETE A	0	100	64	16	1,024.00	SF	6.50	6.50	100	2000	2000	3	80	5,325	
6	0810	CONCRETE A	0	100	4	4	16.00	SF	6.50	6.50	100	2001	2001	3	82	85	
7	1242	WD DECK A	0	100	8	4	32.00	SF	15.00	15.00	100	2001	2001	3	20	96	
8	0861	POOL GUNIT	0	100	0	0	413.00	SF	85.00	85.00	100	2001	2001	3	29	10,180	
9	0858	SCULP CONC	0	100	0	0	763.00	SF	13.00	13.00	100	2001	2001	3	95	9,423	
10	0875	HOT TUB	0	100	0	0	1.00	UT	1,200.00	1,200.00	100	2001	2001	3	20	240	

TOTAL OB/XF 29,177

LAND DESCRIPTION

LN	USE CODE	CLS	LAND USE DESCRIPTION	CAP	RD	LOC ZONE	FRONT	DEPTH	TOT LND UTS	UNIT TYPE	DT	DPTH FACT	% COND	TOT ADJ	UNIT PRICE	ADJ UNIT PRICE	LAND VALUE	OTHER ADJUSTMENTS AND NOTES	YEAR	DENSITY	DECL	FRZ	YR	CONSRV
1	000100	C	SFR	100		R-1A	0.00	0.00	1.00	LT		1.00	1.00	1.00	225,000.00	225,000.00	225,000							

REVIEW DATE 07/02/2018 BY DJX Total Acres: 0.00 Total Land Value: 225,000 Market: 0 Agricultural: 0 Common: 225,000 PRINTED 08/02/2023 BY SYS

LOT 25
IN OR 962/192
CONSERVATION ESMT PT 1012/320

WILLIAMS GREGG A & BETTY K
514 STARBOARD LANDING
FERNANDINA BEACH, FL 32034

2023

00-00-31-1679-0025-0000

NASSAU COUNTY PROPERTY

BUILDING CHARACTERISTICS

ELEMENT	CD	CONSTRUCTION

DOR CODE	0100	SINGLE FAMILY	
MAP NUM		MKT AREA	01
NEIGHBORHOOD/LOC	1080.00		

AREA TYPE	TOTAL GROSS AREA	PCT OF BASE	TOT ADJ AREA	SUBAREA MARKET VALUE
TOTALS				

MARKET ADJUSTMENTS

TYPE	MDL	EFF. AREA	TOT ADJ PTS	EFF. BASE RATE	REPL. COST NEW	AYB	EYB	ECON	FNCT		NORM	% COND

BLD DATE	06/24/2009	RK	LGL DATE
XF DATE			LAND DATE 08/01/2023 MLU
INC DATE			AG DATE

VALUATION SUMMARY

VALUATION BY		STANDARD
Tax Group: 2	Tax Dist:	
BUILDING MARKET VALUE		442,345
TOTAL MARKET OB/XF VALUE		34,668
TOTAL LAND VALUE - MARKET		225,000
TOTAL MARKET VALUE		702,013
SOH/AGL Deduction		335,798
ASSESSED VALUE		366,215
TOTAL EXEMPTION VALUE	HX HB	50,000
BASE TAXABLE VALUE		316,215
TOTAL JUST VALUE		702,013
NCON VALUE		0
INCOME VALUE		
PREVIOUS YEAR MKT VALUE		575,485

PERMIT NUM	DESCRIPTION	AMT	ISSUED

SALES DATA

OFF RECORD Number	DATE	TYPE INST	Q / U	V / I	RSN CD	SALE PRICE
0962/0192	12/14/2000	WD	Q	I		261,300
GRANTOR: PANITZ HOMES						
GRANTEE: WILLIAMS GREGG A &						
0928/1195	4/14/2000	WD	U	V	09	320,600
GRANTOR: SEASIDE JOINT VENTURE						
GRANTEE: PANITZ HOMES						

BUILDING NOTES

BUILDING DIMENSIONS

EXTRA FEATURES

LN	OB/XF CODE	DESCRIPTION	BLD	CAP	L	W	UNITS	UT	Adj R	ADJ UNIT PRICE	ORIG COND	YEAR ON	YEAR ACTUAL	Q	% COND	OB/XF MKT VALUE	NOTES
11	0871	POOL HTR R	0	100	0	0	1.00	UT	2,000.00	2,000.00	100	2001	2001	3	20	400	
12	0910	SCRN RM L	0	100	0	0	1,176.00	SF	15.00	15.00	100	2001	2001	3	20	3,528	
13	0476	VF 6 SBPL	0	100	0	0	66.00	LF	32.00	32.00	100	2007	2007	3	74	1,563	

TOTAL OB/XF 5,491

LAND DESCRIPTION

LN	USE CODE	CLS	LAND USE DESCRIPTION	CAP	RD	LOC ZONE	FRONT	DEPTH	TOT LND UTS	UNIT TYPE	DT	DPTH FACT	% COND	TOT ADJ	UNIT PRICE	ADJ UNIT PRICE	LAND VALUE	OTHER ADJUSTMENTS AND NOTES	YEAR	DENSITY	DECL	FRZ	YR	CONSRV

REVIEW DATE 07/02/2018 BY DJX Total Acres: 0.00 Total Land Value: 225,000 Market: 0 Agricultural: 0 Common: 225,000 PRINTED 08/02/2023 BY SYS