LOT 35
SEA ISLAND PLANTATION PB5/275

WHITAKER NATHANIEL & BRANDI
1009 OCEANVIEW CT
FERNANDINA BEACH, FL 32034

2023

00-00-31-1678-0035-0000

BUILDING CHARACTERISTICS

ELEMENT	CD	CONSTRUCTION
Exterior Wall	10	ABOVE AVG 100
Roof Structur	08	IRREGULAR 100
Roof Cover	03	COMP SHNGL 100
Interior Wall	05	DRYWALL 100
Interior Floo	15	HARDTILE 70
Interior Floo	14	CARPET 30
Air Condition	03	CENTRAL 100
Heating Type	04	AIR DUCTED 100
Bedrooms		3 100
Bathrooms		2 100
Frame	02	WOOD FRAME 100
Stories	1.	1. 100
Units		0 100
Occupancy	00	NONE 100
Quality	05	Quality Level 05
DOR CODE	0100	SINGLE FAMILY
MAP NUM		MKT AREA 01
NEIGHBORHOOD/LOC	1080.00	

AREA TYPE	TOTAL GROSS AREA	PCT OF BASE	TOT ADJ AREA	SUBAREA MARKET VALUE
BAS	1,881	100	1,881	330,382
FGR	600	55	330	57,962
FOP	228	30	68	11,943
FSP	157	40	63	11,065
UAT	286	10	29	5,094
TOTALS	3,152		2,371	416,446

MARKET ADJUSTMENTS

TYPE	MDL	EFF. AREA	TOT ADJ PTS	EFF. BASE RATE	REPL. COST NEW	AYB	EYB	ECON	FNCT		NORM	% COND
0500	01	2,371	128.3898	182.96	433,798	1994	2013	0	0	0	4.00	96.00

1 SFR CUST – 100% - 2023 Heated Area: 1881 HX Base Yr 2023

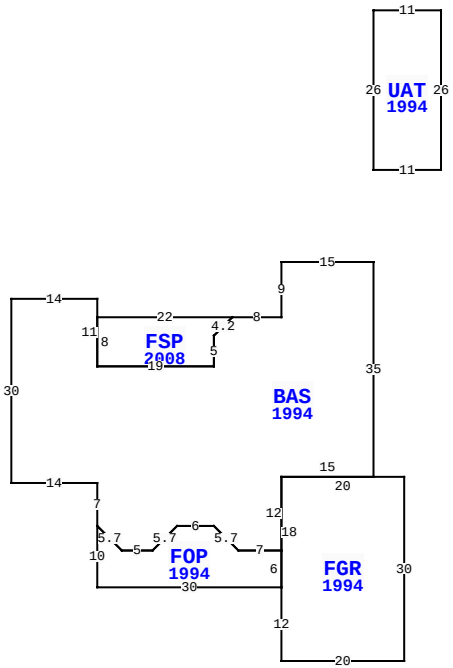

1009 OCEANVIEW CT, FERNANDINA BEACH

BLD DATE		LGL DATE	
XF DATE		LAND DATE	08/01/2023 MLU
INC DATE		AG DATE	

NASSAU COUNTY PROPERTY

PAGE 1 of 1 2

VALUATION SUMMARY

VALUATION BY		STANDARD
Tax Group: 2	Tax Dist:	
BUILDING MARKET VALUE		416,446
TOTAL MARKET OB/XF VALUE		6,844
TOTAL LAND VALUE - MARKET		281,250
TOTAL MARKET VALUE		704,540
SOH/AGL Deduction		0
ASSESSED VALUE		704,540
TOTAL EXEMPTION VALUE	HX HB	50,000
BASE TAXABLE VALUE		654,540
TOTAL JUST VALUE		704,540
NCON VALUE		0
INCOME VALUE		
PREVIOUS YEAR MKT VALUE		532,162

PERMIT NUM	DESCRIPTION	AMT	ISSUED
20090529	RE-ROOF W/30YR AR	4,400	04/29/2009
990004	RESIDE HOUSE	85,715	03/10/1999
8082	NEW CONSTR	85,715	01/06/1994

SALES DATA

OFF RECORD Number	DATE	TYPE INST	Q / U	V / I	RSN CD	SALE PRICE
2566/1804	6/01/2022	WD	Q	I	01	915,000
GRANTOR: IRESABAL CHRISTOPHER						
GRANTEE: WHITAKER NATHANIEL						
1991/1895	7/15/2015	WD	Q	I	01	417,000
GRANTOR: LUKEFAHR STEPHEN & JE						
GRANTEE: IRESABAL CHRISTOPHE						

BUILDING NOTES

BUILDING DIMENSIONS

BAS=[YR=1994] W15 S9 W8 FSP=[YR=2008] W22 S8 E19 N5 R3 U3 $ D3 L3 S5 W19 N11 W14 S30 E14 S7 FOP=[YR=1994] S10 E30 FGR=[YR=1994] S12 E20 N30 W20 S18$ N6 W7 L4 U4 W6 L4 D4 W5 U4 L4 $ R4 D4 E5 U4 R4 E6 D4 R4 E7 N12 E15 N35$ PTR=N15 UAT=[YR=1994] N26 E11 S26 W11$ S15$.

EXTRA FEATURES

LN	OB/XF CODE	DESCRIPTION	BLD	CAP	L	W	UNITS	UT	Adj R	ADJ UNIT PRICE	ORIG COND	YEAR ON	YEAR ACTUAL	Q	% COND	OB/XF MKT VALUE	NOTES
1	0810	CONCRETE A	0	100	0	0	868.00	SF	6.50	6.50	100	1994	1994	3	70	3,949	
2	0500	FP-PRE FAB	0	100	0	0	1.00	UT	3,500.00	3,500.00	100	1994	1994	3	77	2,695	
3	0877	JACUZZI	0	100	0	0	1.00	UT	1,000.00	1,000.00	100	1994	1994	3	20	200	

LAND DESCRIPTION

TOTAL OB/XF 6,844

LN	USE CODE	CLS	LAND USE DESCRIPTION	CAP	RD	LOC ZONE	FRONT	DEPTH	TOT LND UTS	UNIT TYPE	DT	DPTH FACT	% COND	TOT ADJ	UNIT PRICE	ADJ UNIT PRICE	LAND VALUE	OTHER ADJUSTMENTS AND NOTES	YEAR	DENSITY	DECL	FRZ	YR	CONSRV
1	000100	C	SFR	100	0006	R-1	0.00	0.00	1.00	LT		1.00	1.00	1.25	225,000.00	281,250.00	281,250							

REVIEW DATE 10/29/2019 BY DJA Total Acres: 0.00 Total Land Value: 281,250 Market: 0 Agricultural: 0 Common: 281,250 PRINTED 08/02/2023 BY SYS