LOT 3
IN OR 1858/931
SEA ISLAND PLANTATION PB 5/275

LANGLEY JULIE A
3317 N LAKEWOOD AVE
CHICAGO, IL 60657

2023

00-00-31-1678-0003-0000

NASSAU COUNTY PROPERTY

BUILDING CHARACTERISTICS

ELEMENT	CD	CONSTRUCTION
Exterior Wall	10	ABOVE AVG 100
Roof Structur	08	IRREGULAR 100
Roof Cover	03	COMP SHNGL 100
Interior Wall	05	DRYWALL 100
Interior Floo	14	CARPET 70
Interior Floo	11	CLAY TILE 30
Air Condition	03	CENTRAL 100
Heating Type	04	AIR DUCTED 100
Bedrooms		3 100
Bathrooms		2 100
Frame	02	WOOD FRAME 100
Stories	1.	1. 100
Units		0 100
Occupancy	00	NONE 100
Quality	05	Quality Level 05
DOR CODE	0100	SINGLE FAMILY
MAP NUM		MKT AREA 01
NEIGHBORHOOD/LOC	1080.00	

AREA TYPE	TOTAL GROSS AREA	PCT OF BASE	TOT ADJ AREA	SUBAREA MARKET VALUE
BAS	1,735	100	1,735	261,073
DCK	72	10	7	1,054
FGR	572	55	315	47,400
FOP	90	30	27	4,063
FOP	132	30	40	6,019
SFB	312	80	250	37,619
TOTALS	2,913		2,374	357,226

MARKET ADJUSTMENTS

TYPE	MDL	EFF. AREA	TOT ADJ PTS	EFF. BASE RATE	REPL. COST NEW	AYB	EYB	ECON	FNCT		NORM	% COND
0500	01	2,374	122.7842	174.97	415,379	1993	1993	0	0	0	14.00	86.00

1 SFR CUST – 0% - 0 Heated Area: 1985 HX Base Yr

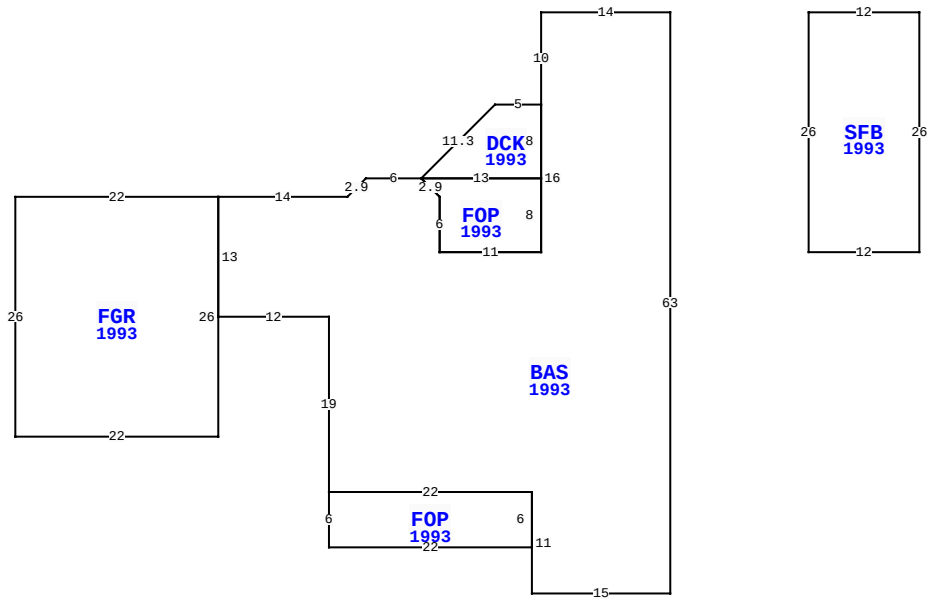

BLD DATE	03/20/2014 KK	LGL DATE	
XF DATE		LAND DATE	08/01/2023 MLU
INC DATE		AG DATE	

2806 ISLAND PLANTATION DR, FERNANDINA BEACH

VALUATION SUMMARY

VALUATION BY	STANDARD
Tax Group: 2	Tax Dist:
BUILDING MARKET VALUE	357,226
TOTAL MARKET OB/XF VALUE	6,810
TOTAL LAND VALUE - MARKET	225,000
TOTAL MARKET VALUE	589,036
SOH/AGL Deduction	95,368
ASSESSED VALUE	493,668
TOTAL EXEMPTION VALUE	0
BASE TAXABLE VALUE	493,668
TOTAL JUST VALUE	589,036
NCON VALUE	0
INCOME VALUE	
PREVIOUS YEAR MKT VALUE	488,950

PERMIT NUM	DESCRIPTION	AMT	ISSUED
7370	NEW CONSTR	80,675	10/15/1992

SALES DATA

OFF RECORD Number	DATE	TYPE INST	Q U	V I	RSN CD	SALE PRICE
2501/0001	8/11/2021	QC	U	I	11	100
GRANTOR: LANGLEY DENNIS J						
GRANTEE: LANGLEY JULIE ANNE						
1858/0931	5/22/2013	WD	U	I	11	100
GRANTOR: LANGLEY DENNIS J						
GRANTEE: LANGLEY JULIE A						

BUILDING NOTES

BUILDING DIMENSIONS

BAS=[YR=1993] W14 S10 DCK=[YR=1993] W5 D8 L8 FOP=[YR=1993] D2 R2 S6 E11 N8 W13$ E13 N8$ S16 W11 N6 U2 L2 W6 D2 L2 W14 FGR=[YR=1993] W22 S26 E22 N26$ S13 E12 S19 FOP=[YR=1993] S6 E22 N6 W22$ E22 S11 E15 N63$ PTR=E15 SFB=[YR=1993] E12 S26 W12 N26$ W15$.

EXTRA FEATURES

LN	OB/XF CODE	DESCRIPTION	BLD	CAP	L	W	UNITS	UT	Adj R	ADJ UNIT PRICE	ORIG COND	YEAR ON	YEAR ACTUAL	Q	% COND	OB/XF MKT VALUE	NOTES
1	0811	CONCRETE B	0	0	61	16	976.00	SF	5.20	5.20	100	1993	1993	3	68	3,451	
2	0810	CONCRETE A	0	0	0	0	123.00	SF	6.50	6.50	100	1993	1993	3	68	544	
3	0500	FP-PRE FAB	0	0	0	0	1.00	UT	3,500.00	3,500.00	100	1993	1993	3	76	2,660	
4	0810	CONCRETE A	0	0	0	0	35.00	SF	6.50	6.50	100	1993	1993	3	68	155	

LAND DESCRIPTION

TOTAL OB/XF 6,810

LN	USE CODE	CLS	LAND USE DESCRIPTION	CAP	RD	LOC ZONE	FRONT	DEPTH	TOT LND UTS	UNIT TYPE	DT	DPTH FACT	% COND	TOT ADJ	UNIT PRICE	ADJ UNIT PRICE	LAND VALUE	OTHER ADJUSTMENTS AND NOTES	YEAR	DENSITY	DECL	FRZ	YR	CONSRV
1	000100	C	SFR	0	0006		0.00	0.00	1.00	LT		1.00	1.00	1.00	225,000.00	225,000.00	225,000							

REVIEW DATE 10/30/2019 BY DJA Total Acres: 0.00 Total Land Value: 225,000 Market: 0 Agricultural: 0 Common: 225,000 PRINTED 08/02/2023 BY SYS